THIS DRAWING IS UNPUBLISHED. RELEASED FOR PUBLICATION 20
© COPYRIGHT 20 BY - ALL RIGHTS RESERVED.

REVISIONS

P	LTR	DESCRIPTION	DATE	DWN	APVD
	A	INITIAL	28MAY2016	YC	CW
	A1	ECR-19-004297	21MAR2019	SR	CW
	A2	ECR-24-229772	25DEC2024	BS	RB
	A3	ECR-25-236400	03APR2025	SC	RB

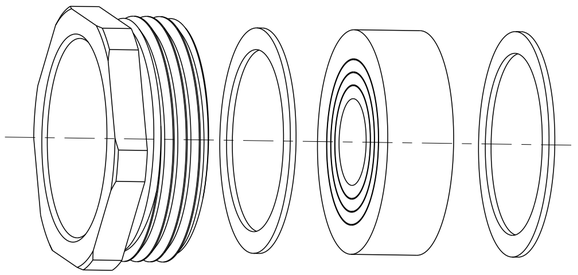

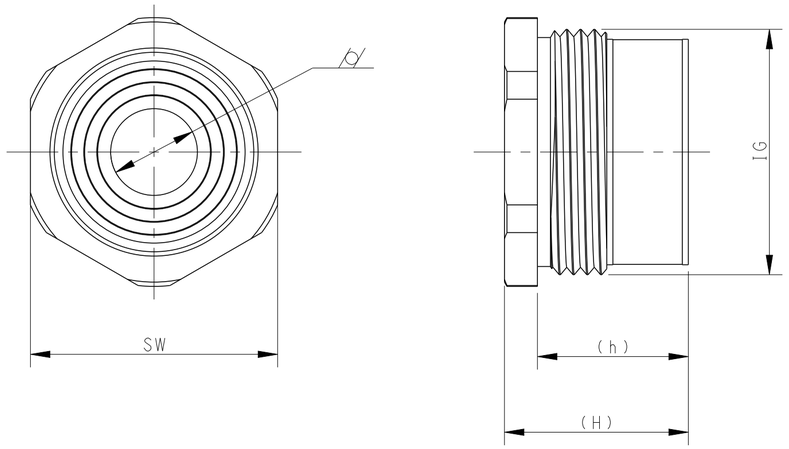

NOTE:
1.TECHNICAL CHARACTERISTICS:
SHELL MATERIAL : BRASS,NICKEL PLATED
SEAL MATERIAL : NBR
WIRE RANGE : SEE TABLE

注释:
1.技术参数:
主体材料:铜镀镍
密封材料:NBR
夹线范围:见表格

	ASSEMBLY PART NUMBER 成品料号	ASSEMBLY PART DESCRIPTION 成品描述	TYPE 类型	WIRE RANGE 夹线范围	IG	SW	⌀	H	h
	T3201320102-000	METAL FLAT JOINTS WITH MUTIPLE SEAL M32 金属平口旋紧件(带多层密封圈) M32	DSM-32-M	18-27	M32X1.5	36	18	22.6	18.6
OBSOLETE	~~T3201250102-000~~	~~METAL FLAT JOINTS WITH MUTIPLE SEAL M25 金属平口旋紧件(带多层密封圈) M25~~	~~DSM-25-M~~	~~13-19~~	~~M25X1.5~~	~~30~~	~~13~~	~~21.2~~	~~17.6~~
OBSOLETE	~~T3201200102-000~~	~~METAL FLAT JOINTS WITH MUTIPLE SEAL M20 金属平口旋紧件(带多层密封圈) M20~~	~~DSM-20-M~~	~~7-12~~	~~M20X1.5~~	~~24~~	~~7.5~~	~~17.6~~	~~14.6~~
	~~T3201160102-000~~	~~METAL FLAT JOINTS WITH MUTIPLE SEAL M16 金属平口旋紧件(带多层密封圈) M16~~	~~DSM-16-M~~	~~5-10~~	~~M16X1.5~~	~~18~~	~~7.5~~	~~16.1~~	~~13.1~~
	~~T3201120102-000~~	~~METAL FLAT JOINTS WITH MUTIPLE SEAL M12 金属平口旋紧件(带多层密封圈) M12~~	~~DSM-12-M~~	~~5-8~~	~~M12X1.5~~	~~14~~	~~5~~	~~15.9~~	~~12.9~~
	~~T3201480101-000~~	~~METAL FLAT JOINTS WITH MUTIPLE SEAL PG48 金属平口旋紧件(带多层密封圈) PG48~~	~~DSM-48~~	~~36-45~~	~~PG48~~	~~60~~	~~40~~	~~34~~	~~29~~
	~~T3201420101-000~~	~~METAL FLAT JOINTS WITH MUTIPLE SEAL PG42 金属平口旋紧件(带多层密封圈) PG42~~	~~DSM-42~~	~~30-39~~	~~PG42~~	~~54~~	~~30.5~~	~~32.9~~	~~28.4~~
	~~T3201360101-000~~	~~METAL FLAT JOINTS WITH MUTIPLE SEAL PG36 金属平口旋紧件(带多层密封圈) PG36~~	~~DSM-36~~	~~24-33~~	~~PG36~~	~~47~~	~~24~~	~~29.4~~	~~24.9~~
OBSOLETE	~~T3201290101-000~~	~~METAL FLAT JOINTS WITH MUTIPLE SEAL PG29 金属平口旋紧件(带多层密封圈) PG29~~	~~DSM-29~~	~~18-27~~	~~PG29~~	~~37~~	~~19~~	~~23.1~~	~~19.1~~
	~~T3201210101-000~~	~~METAL FLAT JOINTS WITH MUTIPLE SEAL PG21 金属平口旋紧件(带多层密封圈) PG21~~	~~DSM-21~~	~~10-19~~	~~PG21~~	~~28.5~~	~~10~~	~~21.2~~	~~17.4~~
	T3201160101-000	METAL FLAT JOINTS WITH MUTIPLE SEAL PG16 金属平口旋紧件(带多层密封圈) PG16	DSM-16	7-12	PG16	24	7.5	19.4	16.4
OBSOLETE	~~T3201130101-000~~	~~METAL FLAT JOINTS WITH MUTIPLE SEAL PG13.5 金属平口旋紧件(带多层密封圈) PG13.5~~	~~DSM-13.5~~	~~7-12~~	~~PG13.5~~	~~20~~	~~7.5~~	~~16.8~~	~~13.8~~
	~~T3201110101-000~~	~~METAL FLAT JOINTS WITH MUTIPLE SEAL PG11 金属平口旋紧件(带多层密封圈) PG11~~	~~DSM-11~~	~~7-12~~	~~PG11~~	~~18~~	~~7.5~~	~~16.8~~	~~13.8~~
OBSOLETE	~~T3201090101-000~~	~~METAL FLAT JOINTS WITH MUTIPLE SEAL PG9 金属平口旋紧件(带多层密封圈) PG9~~	~~DSM-9~~	~~5-10~~	~~PG9~~	~~17~~	~~5~~	~~16.1~~	~~13.1~~

THIS DRAWING IS A CONTROLLED DOCUMENT.

DIMENSIONS: mm

TOLERANCES UNLESS OTHERWISE SPECIFIED:
0 PLC ±-
1 PLC ±-
2 PLC ±-
3 PLC ±-
4 PLC ±-
ANGLES ±-

MATERIAL - -
FINISH - -

DWN YORK CHEN 28MAY2016
CHK KYLE ZENG 28MAY2016
APVD CHRIS WANG 28MAY2016
PRODUCT SPEC -
APPLICATION SPEC -
WEIGHT -

TE Connectivity

NAME METAL FLAT JOINTS WITH MUTIPLE SEAL

SIZE A2 | CAGE CODE 00779 | DRAWING NO C-T3201XX010X000 | RESTRICTED TO

CUSTOMER DRAWING | SCALE 2:1 | SHEET 1 OF 1 | REV A3

1471-9 (3/13)