THIS DRAWING IS UNPUBLISHED. RELEASED FOR PUBLICATION 20
© COPYRIGHT 20 BY - ALL RIGHTS RESERVED.

REVISIONS

P	LTR	DESCRIPTION	DATE	DWN	APVD
	A	INITIAL RELEASED	24FEB2023	QY	CW
	A1	ECR-23-196068	02JAN2024	QY	CW
	A2	ECR-24-203269	01APR2024	QY	CW

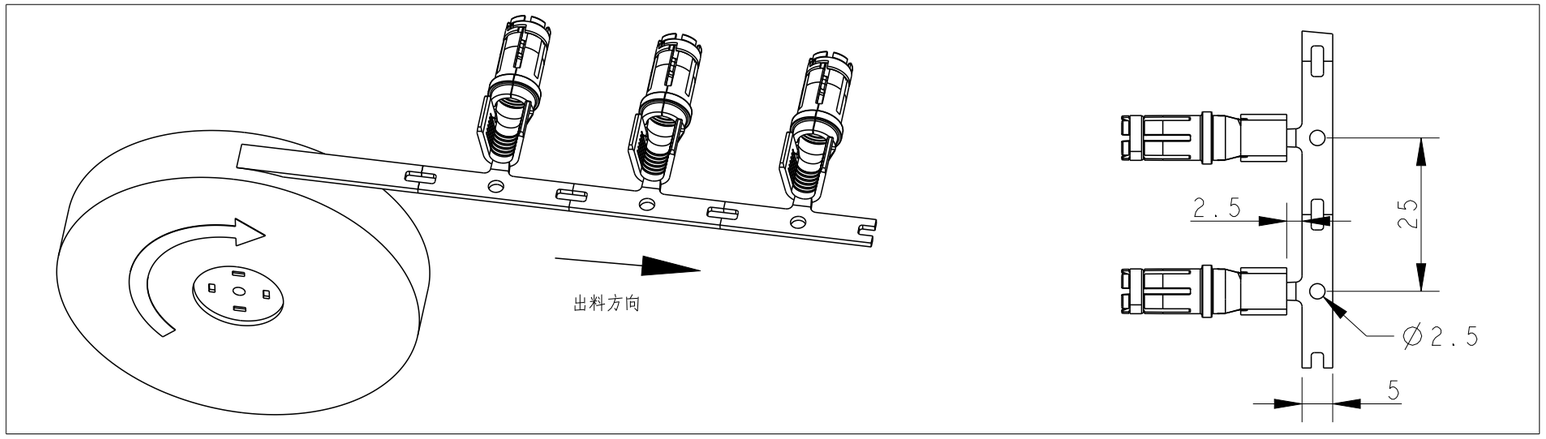

NOTES:

1. MATERIAL:
   BODY:COPPER ALLOY
   BARREL:STAINLESS STEEL
2. SURFACE PLATING:
   MATING AREA SILVER PLATED
   OTHERS TIN PLATING
3. WIRE RANGE: 10~12 mm^2

注释：
1. 材料：
   主体：铜合金
   护套：不锈钢
2. 表面电镀：
   配合区域镀银，其余区域镀雾锡
3. 接线范围：10~12 mm^2

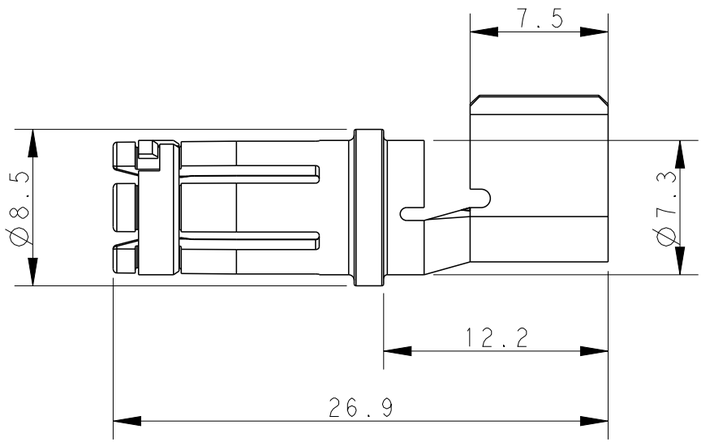

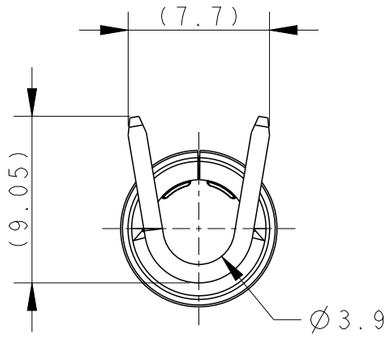

PART NUMBER 料号	PART DESCRIPTION 描述		QTY 包装数量
T2240002120-001	SCSF10-12	Ø5MM FEMALE STAMPING CONTACT,SILVER PLATED,10~12MM² Ø5MM 冲压母针，镀银，10~12MM²	1000PCS /BOX
T2240002120-000	SCSF10-12	Ø5MM FEMALE STAMPING CONTACT,SILVER PLATED,10~12MM² Ø5MM 冲压母针，镀银，10~12MM²	4000PCS /BOX

THIS DRAWING IS A CONTROLLED DOCUMENT.

DIMENSIONS: mm

TOLERANCES UNLESS OTHERWISE SPECIFIED:
0 PLC ±-
1 PLC ±-
2 PLC ±-
3 PLC ±-
4 PLC ±-
ANGLES ±-

MATERIAL -
FINISH -

DWN QIANG YUAN 24FEB2023
CHK GINO YAO 24FEB2023
APVD CHRIS WANG 24FEB2023
PRODUCT SPEC 108-137664
APPLICATION SPEC 114-137664
WEIGHT -

TE Connectivity

NAME DIA 5MM FEMALE STAMPING CONTACT

SIZE	CAGE CODE	DRAWING NO	RESTRICTED TO
A3	00779	C-T2240002120000	-

CUSTOMER DRAWING | SCALE 1:1 | SHEET 1 OF 1 | REV A2