THIS DRAWING IS UNPUBLISHED. RELEASED FOR PUBLICATION 20
© COPYRIGHT 20 BY - ALL RIGHTS RESERVED.

REVISIONS

P	LTR	DESCRIPTION	DATE	DWN	APVD
	A	INITIAL	04JUL2018	YC	CW
	B	ECR-21-111798	27SEP2021	WQR	CW

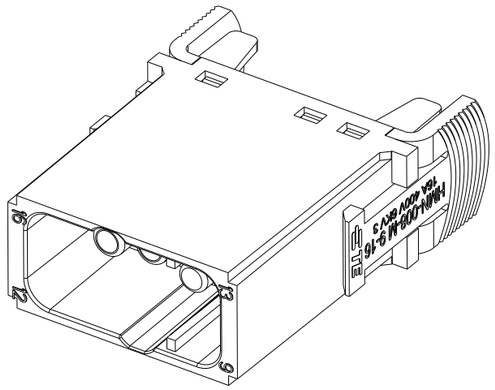

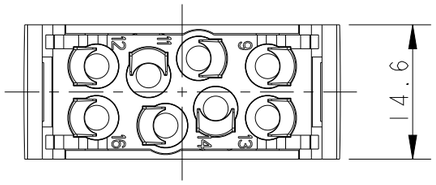

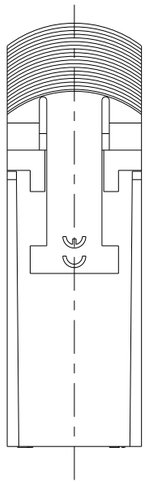

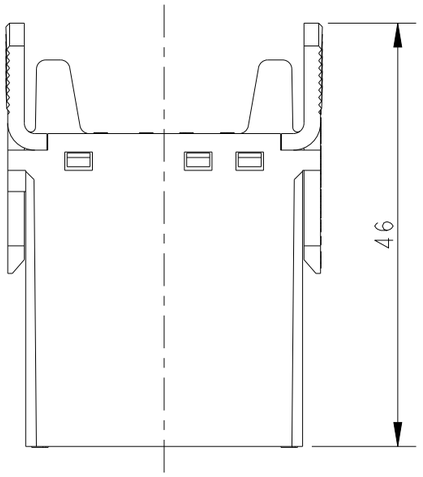

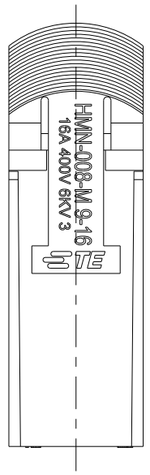

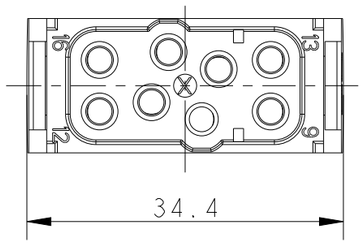

NOTES:
1. TECHNICAL CHARACTERISTICS:
   INSULATION MATERIAL: PC
   RATED VOLTAGE: 400V
   RATED CURRENT: 16A
   INSULATION RESISTANCE: >=400MΩ
   RATED IMPULSE VOLTAGE: 6KV
   POLLUTION DEGREE: 3
   FLAMMABILITY: UL94V-0
   MATING CYCLES: 500 CYCLES
   WIRE RANGE: 0.14~4 mm² (26~12 AWG)
   CONTACT TYPE: CRIMP CONTACT
2. CONTACT NEED TO BE ORDERED SEPARATELY.
   (ORDER No. REFER TO DRAWING:T20300X10XX000)

注释：
1. 技术参数：
   绝缘材料： PC
   额定电压： 400V
   额定电流： 16A
   绝缘电阻： >=400MΩ
   额定脉冲电压： 6KV
   污染等级： 3
   阻燃等级： UL94V-0
   插拔次数： 500次
   接线范围： 0.14~4 mm² (26~12 AWG)
   接线类型： 冷压接
2. 端子需要单独订购.
   (订货号参考图面： T20300X10XX000)

PART NUMBER 成品料号	PART DESCRIPTION 产品描述	
T2111082101-100	HMN-008-M 9-16	HMN-008 MALE MODULE INSERT 9-16 HMN-008 模块公插,9-16

THIS DRAWING IS A CONTROLLED DOCUMENT.

DIMENSIONS: mm

TOLERANCES UNLESS OTHERWISE SPECIFIED:
0 PLC ±-
1 PLC ±-
2 PLC ±-
3 PLC ±-
4 PLC ±-
ANGLES ±-

MATERIAL - -
FINISH - -

DWN YORK CHEN 04JUL2018
CHK GINO YAO 04JUL2018
APVD CHRIS WANG 04JUL2018
PRODUCT SPEC 108-137061
APPLICATION SPEC 114-137061
WEIGHT -

TE Connectivity

NAME HMN-008-M 9-16

SIZE	CAGE CODE	DRAWING NO	RESTRICTED TO
A3	00779	C-T2111082101100	

CUSTOMER DRAWING | SCALE 3:2 | SHEET 1 OF 1 | REV B

1470-19 (3/13)