THIS DRAWING IS UNPUBLISHED. RELEASED FOR PUBLICATION 20
© COPYRIGHT 20 BY - ALL RIGHTS RESERVED.

REVISIONS

P	LTR	DESCRIPTION	DATE	DWN	APVD
	A	INITIAL	19MAY2017	RL	CW
	B	ECR-20-016101	09JUN2021	BS	CW

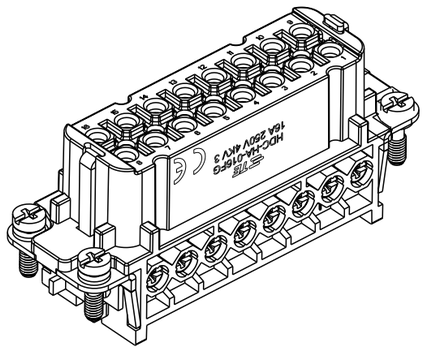

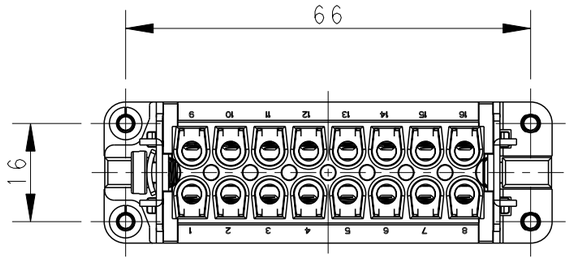

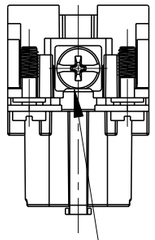

M4 SCREW, RECOMMENDED
TIGHTENING TORQUE 1.2Nm
M4 螺丝，推荐锁紧力矩为 1.2Nm

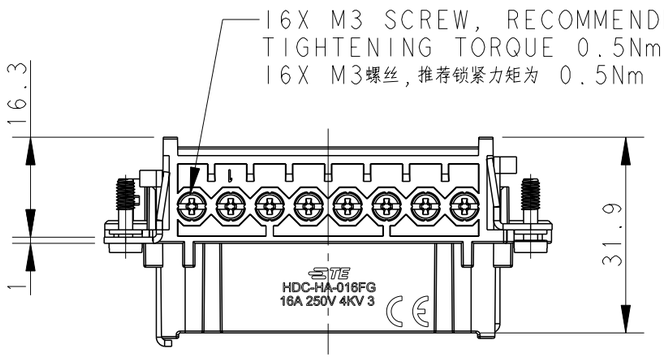

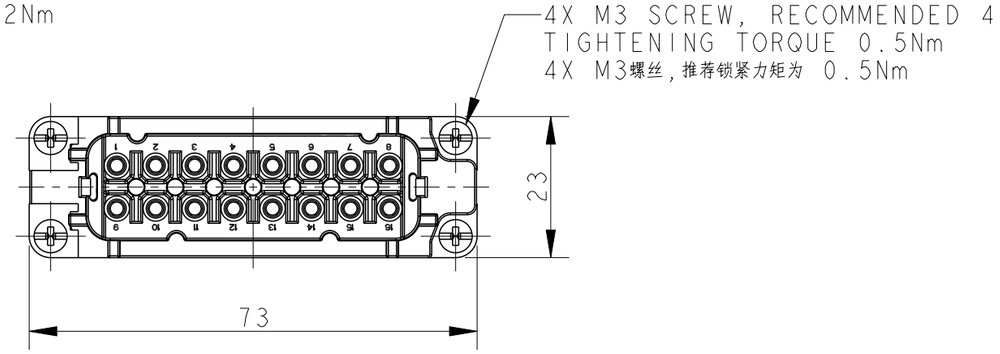

NOTES:
1. TECHNICAL CHARACTERISTICS:
   INSULATION MATERIAL: PC
   RATED VOLTAGE: 250 V
   RATED CURRENT: 16 A
   INSULATION RESISTANCE: >=400MΩ
   RATED IMPULSE VOLTAGE: 4 KV
   POLLUTION DEGREE: 3
   FLAMMABILITY: UL94V-0
   MATING CYCLES: 500 CYCLES
   WIRE RANGE: 0.5-2.5 mm² (20-14 AWG)
   CONTACT FINISH: GOLD PLATED
   CONTACT TYPE: SCREW CONTACT

注释：
1. 技术参数：
   绝缘材料： PC
   额定电压： 250V
   额定电流： 16A
   绝缘电阻： >=400MΩ
   额定脉冲电压： 4 KV
   污染等级： 3
   阻燃等级： UL94V-0
   插拔次数： 500 次
   接线范围： 0.5-2.5 mm² (20-14 AWG)
   端子表面处理： 镀金
   接线类型： 螺丝连接

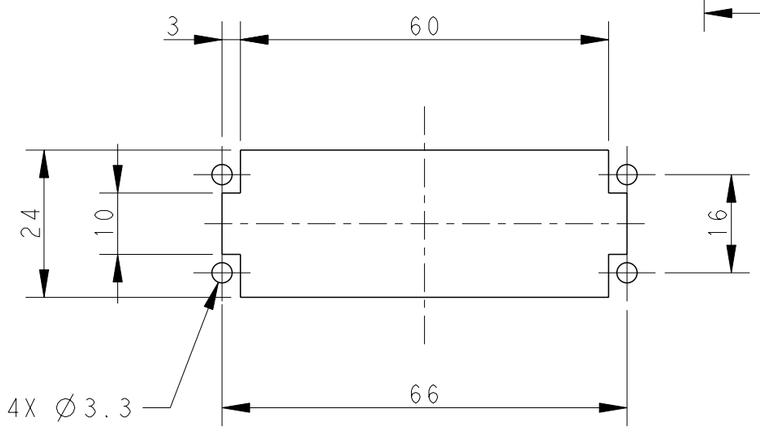

PANEL CUT FOR INSERTS FOR USE
WITHOUT HOODS/ HOUSINGS
不使用防护外壳时，芯件的安装开孔图

PART NUMBER 料号	PART DESCRIPTION 描述
T2010162211-000	HA-016-FG — HA-016 FEMALE INSERT, GOLD PLATED HA-016母插，镀金

THIS DRAWING IS A CONTROLLED DOCUMENT.

DIMENSIONS: mm

TOLERANCES UNLESS OTHERWISE SPECIFIED:
0 PLC ±-
1 PLC ±-
2 PLC ±-
3 PLC ±-
4 PLC ±-
ANGLES ±-

MATERIAL - -
FINISH - -

DWN ROY LIU 19MAY2017
CHK GINO YAO 19MAY2017
APVD CHRIS WANG 19MAY2017
PRODUCT SPEC 108-137045
APPLICATION SPEC 114-137045
WEIGHT -

TE Connectivity

NAME HA-016-FG

SIZE	CAGE CODE	DRAWING NO	RESTRICTED TO
A3	00779	C-T2010162211000	-

CUSTOMER DRAWING | SCALE 1:1 | SHEET 1 OF 1 | REV B

printed on 18 Jun 2021 14:40 (China Standard Time) from TE236667