THIS DRAWING IS UNPUBLISHED. RELEASED FOR PUBLICATION 20
© COPYRIGHT 20 BY - ALL RIGHTS RESERVED.

REVISIONS

P	LTR	DESCRIPTION	DATE	DWN	APVD
	A	INITIAL RELEASE	30OCT2018	RG	CW
	B	ECR-20-014403	20MAY2021	BS	CW

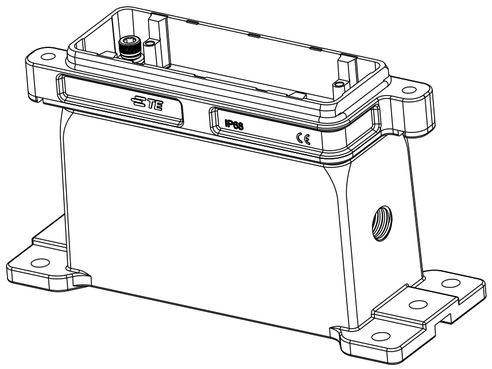

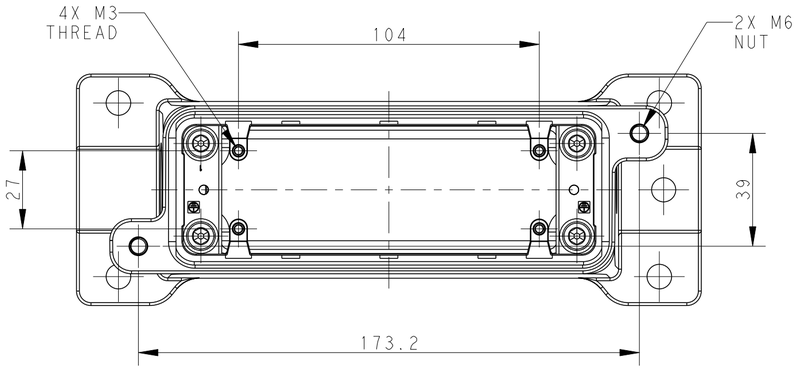

NOTES:
1. TECHNICAL CHARACTERISTICS:
   HOOD MATERIAL: ALUMINIUM ALLOY
   SURFACE: POWDER COATED, BLACK
   DEGREE OF PROTECTION: IP68 (MATED)

注释：
1. 技术参数：
   上壳材料：铝合金
   表面处理：黑色粉末喷涂
   防护等级：IP68(配合)

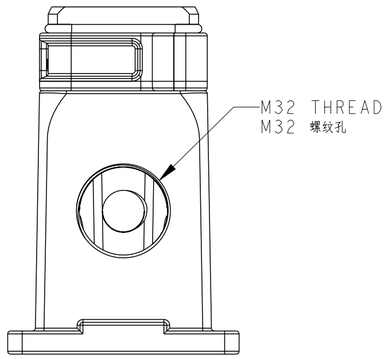

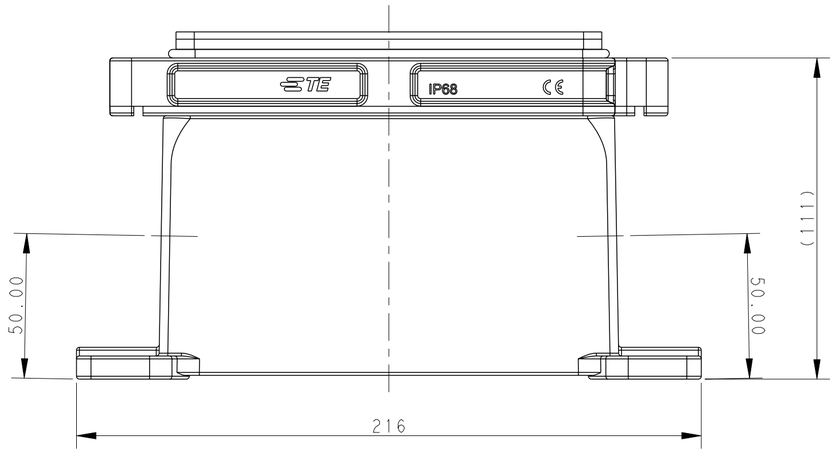

SCALE 2:3

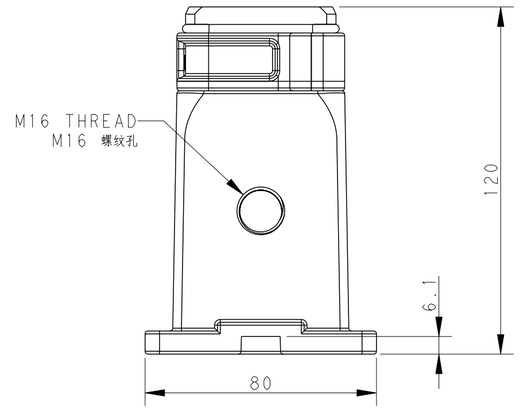

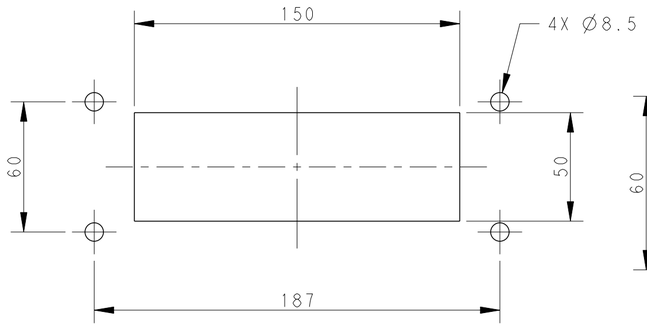

PANEL CUT OUT
面板安装开孔尺寸

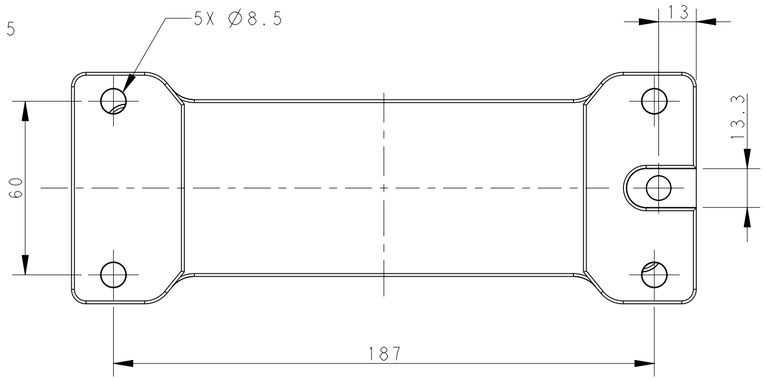

PART NUMBER 料号	PART DESCRIPTION 描述		PG/M THREAD PG/M 螺纹孔
T1950243206-000	H24BPR-SGRH-2M32/M16	H24BPR HOUSING,DIAGONAL LOCKING, SURFACE MOUNTED,SIDE ENTRY M32 AND M16, POWDER COATED,BLACK H24BPR下壳,对角锁定,表面安装,侧出M32及M16,黑色粉末喷涂	M32 AND M16

THIS DRAWING IS A CONTROLLED DOCUMENT.

DIMENSIONS: mm

TOLERANCES UNLESS OTHERWISE SPECIFIED:
0 PLC ±-
1 PLC ±-
2 PLC ±-
3 PLC ±-
4 PLC ±-
ANGLES ±-

MATERIAL - -
FINISH - -

DWN ROBERT GAN 30OCT2018
CHK GINO YAO 30OCT2018
APVD CHRIS WANG 30OCT2018
PRODUCT SPEC 108-137014
APPLICATION SPEC 114-137014
WEIGHT -

TE Connectivity

NAME H24BPR-SGRH-2M32/M16

SIZE	CAGE CODE	DRAWING NO	RESTRICTED TO
A2	-	C-T195024XXXX000	-

CUSTOMER DRAWING | SCALE 1:2 | SHEET 1 OF 1 | REV B

printed on 20 May 2021 16:37 (China Standard Time) from TE236667