THIS DRAWING IS UNPUBLISHED. RELEASED FOR PUBLICATION 20
© COPYRIGHT 20 BY - ALL RIGHTS RESERVED.

REVISIONS

P	LTR	DESCRIPTION	DATE	DWN	APVD
	A	INITIAL	18JUN2015	DW	CW
	A1	ECR-15-016754	01DEC2015	DW	CW
	B	ECR-20-014876	26JUL2021	WQR	CW

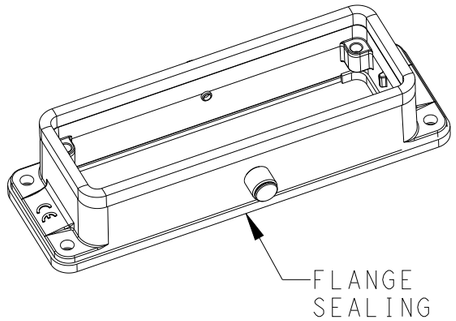

SCALE 1:2

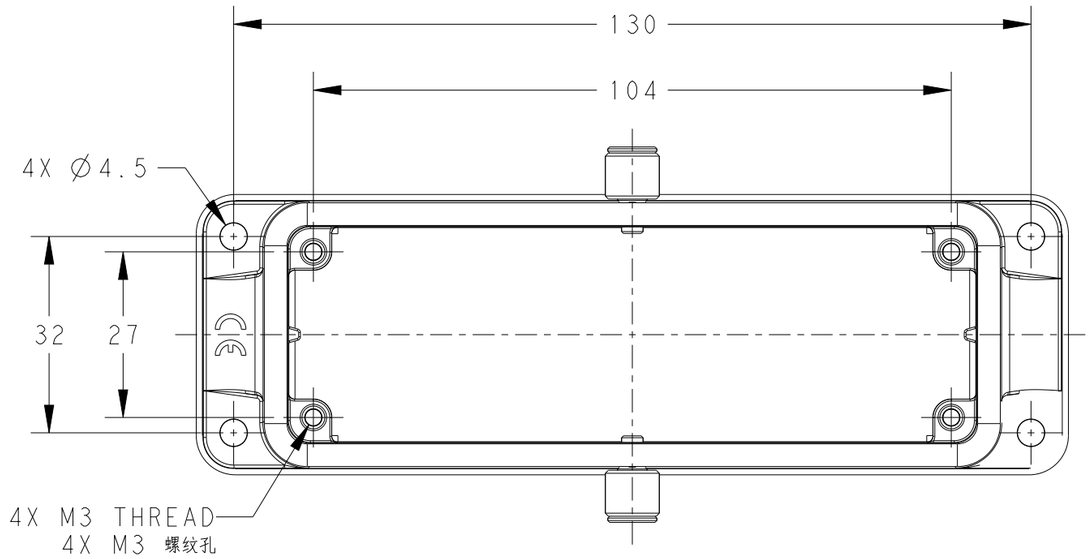

NOTES:
1. TECHNICAL CHARACTERISTICS:
   HOUSING MATERIAL: DIE CAST ALUMINIUM ALLOY
   SURFACE: POWDER COATED, GREY
   DEGREE OF PROTECTION: IP65 (MATED)

注释：
1. 技术参数：
   下壳材料： 铝合金
   表面处理： 粉末涂层，灰色
   防护等级： IP65（配合）

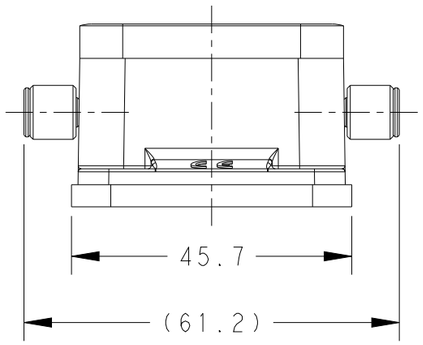

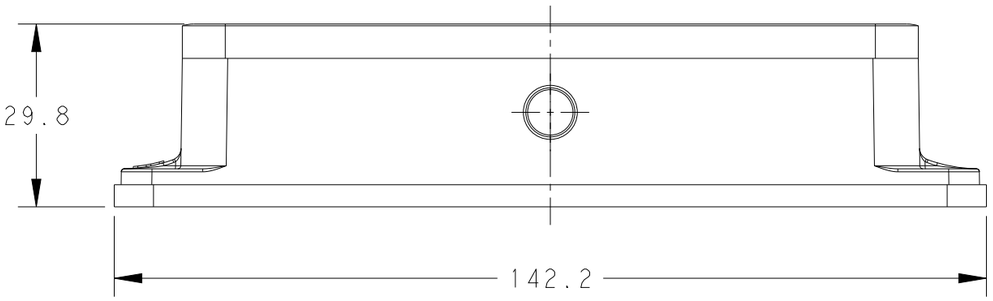

PANEL CUT OUT

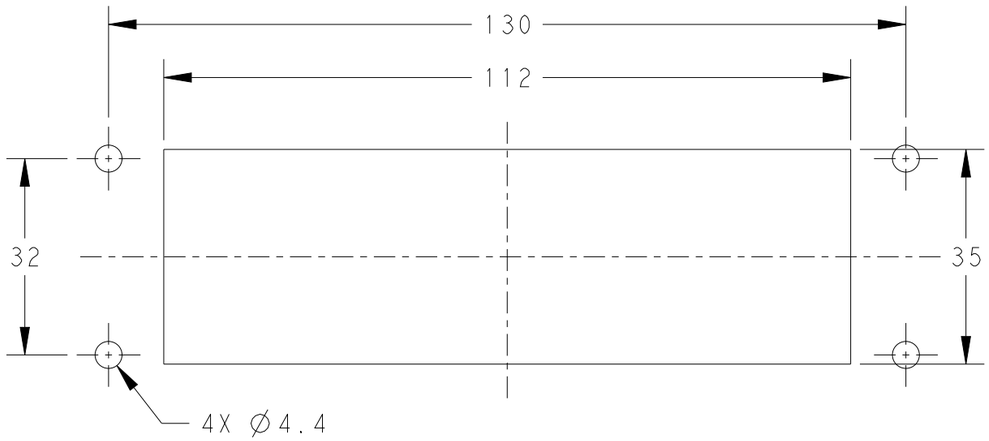

PART NUMBER	DESCRIPTION	HOUSING COLOR
T1550240000-000	H24B-AG-RC	GREY
T1550240000-001	H24B-AG-RC FLANGE SEALING FIXED BY GLUE	GERY FLANGE SEALING FIXED BY GLUE WITH HOUSING

THIS DRAWING IS A CONTROLLED DOCUMENT.

DIMENSIONS: mm

TOLERANCES UNLESS OTHERWISE SPECIFIED:
0 PLC ±-
1 PLC ±-
2 PLC ±-
3 PLC ±-
4 PLC ±-
ANGLES ±-

MATERIAL - -

FINISH - -

DWN David Wang 05JUN2015
CHK Chris Wang 05JUN2015
APVD Xiang Xu 05JUN2015
PRODUCT SPEC 108-137013
APPLICATION SPEC 114-137013
WEIGHT -

TE Connectivity

NAME H24B-AG-RC

SIZE	CAGE CODE	DRAWING NO	RESTRICTED TO
A3	00779	C-T1550240000000	-

Customer Drawing | SCALE 1:1 | SHEET 1 OF 1 | REV B

1470-19 (3/13)