THIS DRAWING IS UNPUBLISHED. RELEASED FOR PUBLICATION 20
© COPYRIGHT 20 BY - ALL RIGHTS RESERVED.

REVISIONS

P	LTR	DESCRIPTION	DATE	DWN	APVD
	A	INITIAL RELEASE	08NOV2017	YC	CW
	B	ECR-20-014388	25NOV2020	WQR	CW

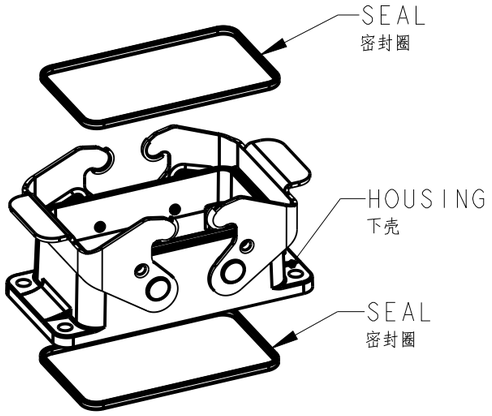

SCALE 1:2

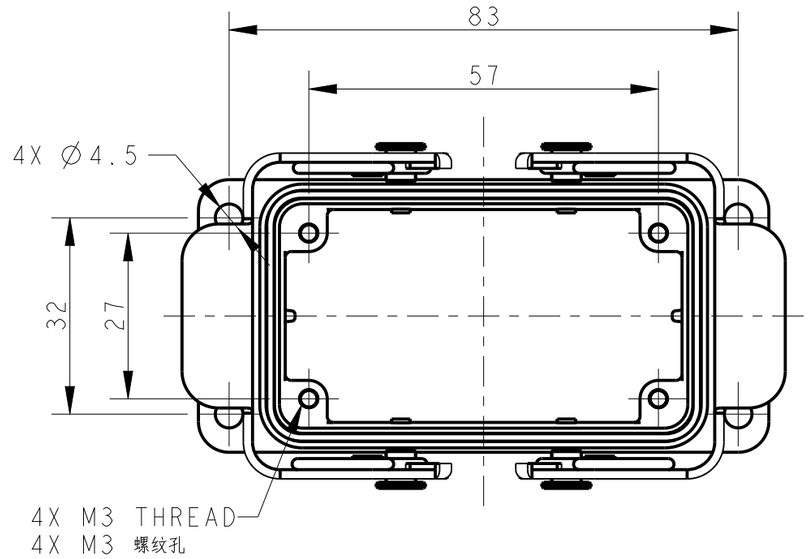

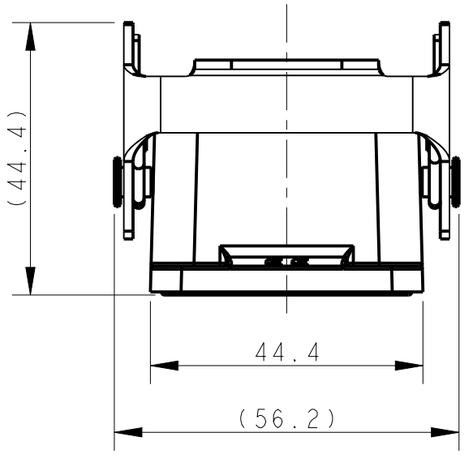

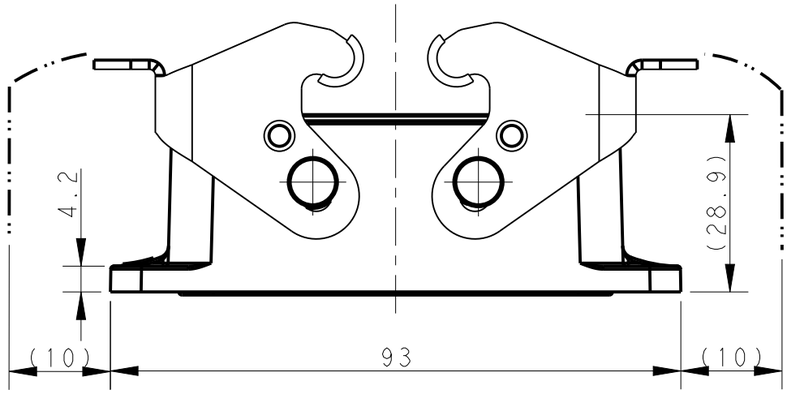

NOTES:
1. TECHNICAL CHARACTERISTICS:
   HOUSING MATERIAL: DIE CAST ALUMINIUM ALLOY
   HOUSING SURFACE: CONDUCTIVE PAINTING
   HOUSING SURFACE COLOR: TRANSPARENCY
   HOUSING RESISTANCE: ≤10 mΩ
   SEAL MATERIAL: CONDUCTIVE RUBBER
   DEGREE OF PROTECTION: IP65 (MATED)

注释：
1. 技术参数：
   下壳材料： 铝合金
   下壳表面处理： 喷导电漆
   下壳表面处理颜色： 透明
   下壳电阻： ≤10 mΩ
   密封圈材料： 导电橡胶
   防护等级： IP65(配合)

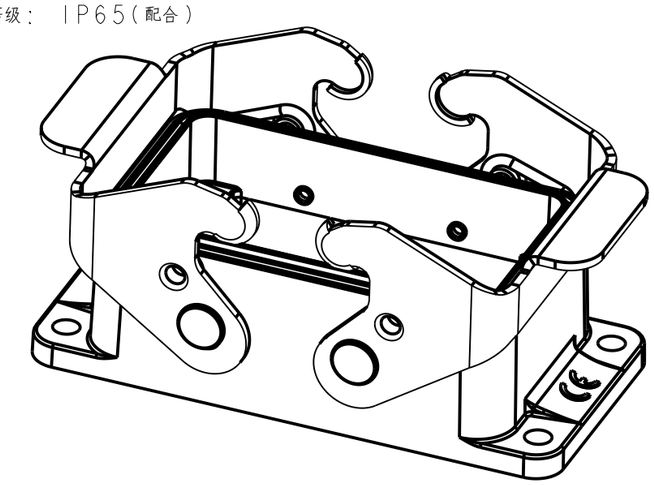

PANEL CUT OUT DIMENSION, ONLY FOR REFERENCE
面板开口尺寸，仅供参考

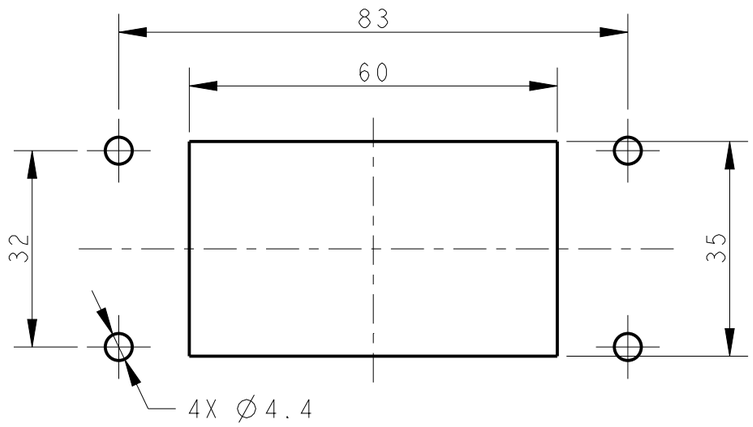

PART NUMBER 料号	PART DESCRIPTION 描述
T1415102000-000	H10B-AG-EMC — H10B EMC HOUSING,BULKHEAD MOUNTED, METAL DOUBLE LOCKING H10B 屏蔽下壳，开孔安装，彩锌双扣

THIS DRAWING IS A CONTROLLED DOCUMENT.

DIMENSIONS: mm

TOLERANCES UNLESS OTHERWISE SPECIFIED:
0 PLC ±-
1 PLC ±-
2 PLC ±-
3 PLC ±-
4 PLC ±-
ANGLES ±-

MATERIAL - -
FINISH - -

DWN YORK CHEN 08NOV2017
CHK GINO YAO 08NOV2017
APVD CHRIS WANG 08NOV2017
PRODUCT SPEC 108-137016
APPLICATION SPEC 114-137016
WEIGHT -

TE Connectivity

NAME H10B-AG-EMC

SIZE	CAGE CODE	DRAWING NO	RESTRICTED TO
A3	00779	C-T1415102000000	-

CUSTOMER DRAWING | SCALE 1:1 | SHEET 1 OF 1 | REV B