THIS DRAWING IS UNPUBLISHED. RELEASED FOR PUBLICATION 20
© COPYRIGHT 20 BY - ALL RIGHTS RESERVED.

REVISIONS

P	LTR	DESCRIPTION	DATE	DWN	APVD
	A	INITIAL RELEASE	15AUG2016	DW	CW
	B	ECR-20-014388	09DEC2020	WQR	CW
	B1	ECR-21-105138	30JUN2021	WQR	CW

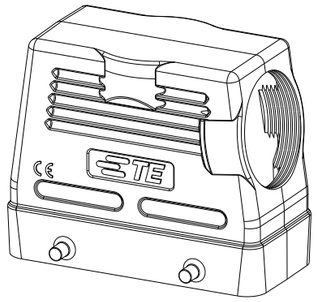

SCALE 1:2

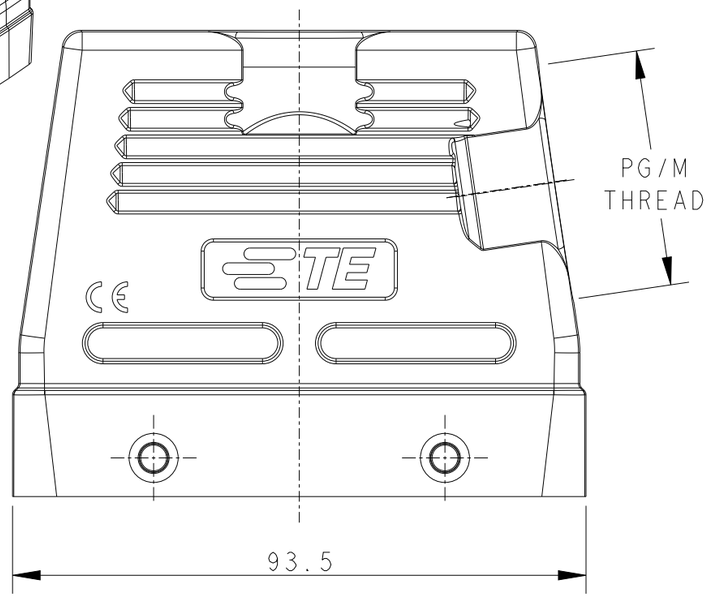

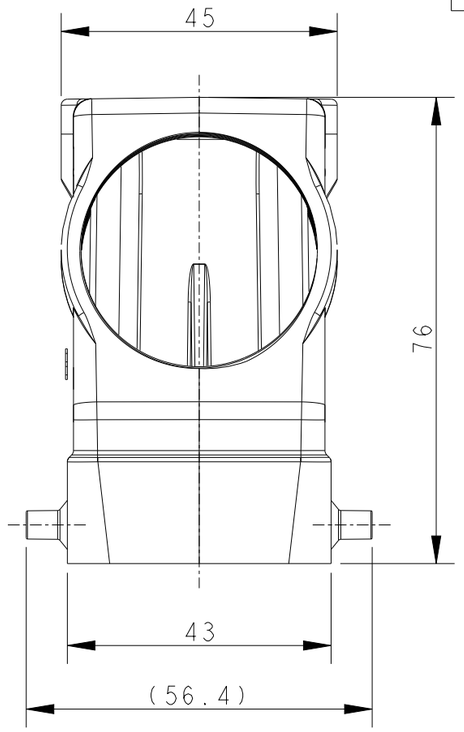

NOTES:
1. TECHNICAL CHARACTERISTICS:
   HOOD MATERIAL: DIE CAST ALUMINIUM ALLOY
   SURFACE: CONDUCTIVE PAINTING
   DEGREE OF PROTECTION: IP65 (MATED)

注释：
1. 技术参数：
   上壳材料： 铝合金
   表面处理： 喷导电漆
   防护等级： IP65(配合)

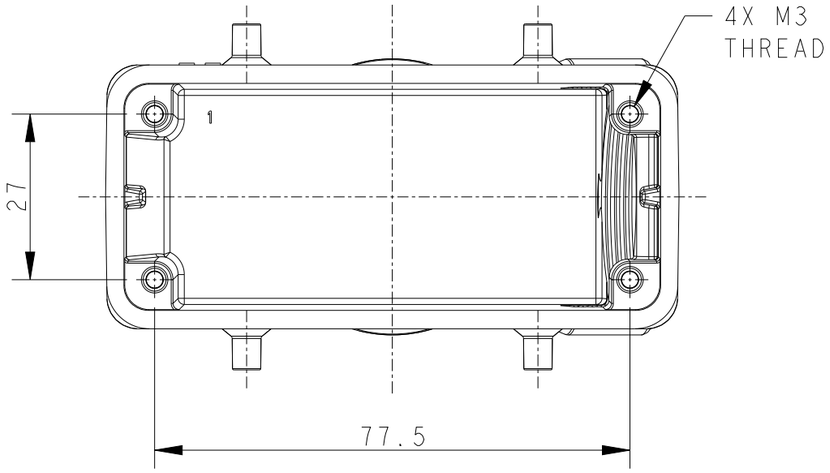

PART NUMBER 料号	PART DESCRIPTION 描述		PG/M THREAD PG/M 螺纹
T1230165121-000	H16B-TSH-EMC-PG21	H16B EMC HOOD,SIDE ENTRY PG21,4 EAR,HIGH CONSTRUCTION H16B带屏蔽上壳,侧出PG21,4耳,高结构	PG21
T1230165129-000	H16B-TSH-EMC-PG29	H16B EMC HOOD,SIDE ENTRY PG29,4 EAR,HIGH CONSTRUCTION H16B带屏蔽上壳,侧出PG29,4耳,高结构	PG29
T1230165125-000	H16B-TSH-EMC-M25	H16B EMC HOOD,SIDE ENTRY M25,4 EAR,HIGH CONSTRUCTION H16B带屏蔽上壳,侧出M25,4耳,高结构	M25
T1230165132-000	H16B-TSH-EMC-M32	H16B EMC HOOD,SIDE ENTRY M32,4 EAR,HIGH CONSTRUCTION H16B带屏蔽上壳,侧出M32,4耳,高结构	M32
T1230165140-000	H16B-TSH-EMC-M40	H16B EMC HOOD,SIDE ENTRY M40,4 EAR,HIGH CONSTRUCTION H16B带屏蔽上壳,侧出M40,4耳,高结构	M40

THIS DRAWING IS A CONTROLLED DOCUMENT.

DIMENSIONS: mm

TOLERANCES UNLESS OTHERWISE SPECIFIED:
0 PLC ±-
1 PLC ±-
2 PLC ±-
3 PLC ±-
4 PLC ±-
ANGLES ±-

MATERIAL - -
FINISH - -

DWN DAVID WANG 15AUG2016
CHK CHRIS WANG 15AUG2016
APVD XIANG XU 15AUG2016
PRODUCT SPEC 108-137016
APPLICATION SPEC 114-137016
WEIGHT -

TE Connectivity

NAME H16B-TSH-EMC-M/PG

SIZE	CAGE CODE	DRAWING NO	RESTRICTED TO
A3	00779	C-T12301651XX000	-

Customer Drawing | SCALE 1:1 | SHEET 1 OF 1 | REV B1