THIS DRAWING IS UNPUBLISHED. RELEASED FOR PUBLICATION -
© COPYRIGHT copyright_dBYe- ALL RIGHTS RESERVED.

REVISIONS

P	LTR	DESCRIPTION	DATE	DWN	APVD
	A	INITIAL	16SEP2017	CH	CW

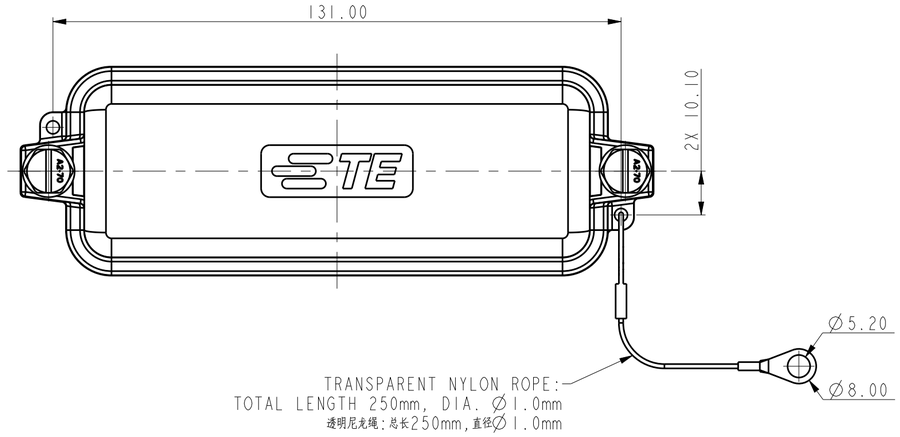

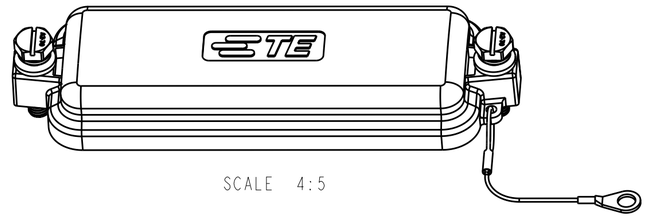

SCALE 4:5

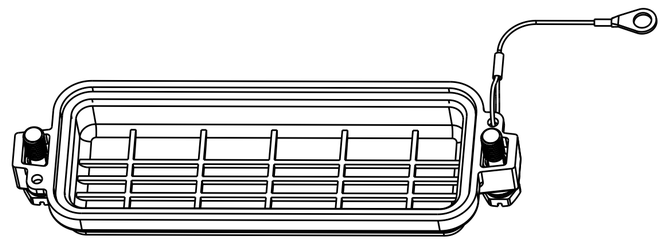

SCALE 4:5

NOTES:
1. TECHNICAL CHARACTERISTICS:
   PROTECTION COVER MATERIAL: ABS
   DEGREE OF PROTECTION: IP65 (MATED)

注释:
1. 技术参数:
   保护盖材质: ABS
   防护等级: IP65(配合)

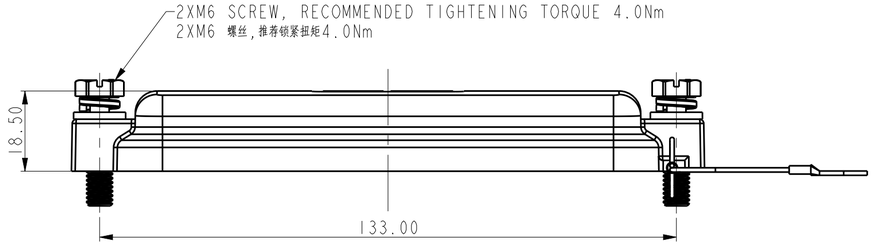

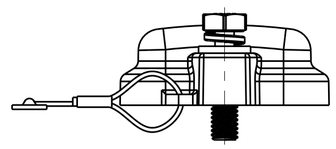

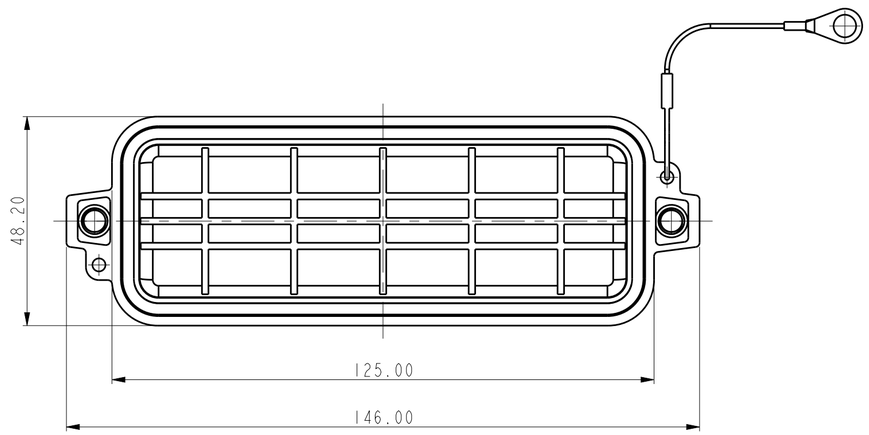

PART NUMBER 料号	PART DESCRIPTION 描述	
TI002241101-100	H24BK-KDBP	H24BK HOUSING PLASTIC PROTECTION COVER, CENTER LOCKING, IP65, MINUS SCREW, SEALING, NYLON ROPE, TERMINAL, WHITE H24BK下壳中部锁定塑料保护盖,IP65,一字槽螺丝,带密封,带尼龙绳,压线端子,白色

THIS DRAWING IS A CONTROLLED DOCUMENT.

DIMENSIONS: mm

TOLERANCES UNLESS OTHERWISE SPECIFIED:
0 PLC ±-
1 PLC ±-
2 PLC ±-
3 PLC ±-
4 PLC ±-
ANGLES ±-

MATERIAL -
FINISH -

DWN CHARLIE.HU 16SEP2017
CHK GINO.YAO 16SEP2017
APVD CHRIS.WANG 16SEP2017
PRODUCT SPEC -
APPLICATION SPEC -
WEIGHT -

TE Connectivity

NAME H24BK-KDBP

SIZE	CAGE CODE	DRAWING NO	RESTRICTED TO
A2	-	C-TI002241101100	-

CUSTOMER DRAWING | SCALE 1:1 | SHEET 1 OF 1 | REV A