THIS DRAWING IS UNPUBLISHED. RELEASED FOR PUBLICATION MAR , 2017.
© COPYRIGHT 2017 By TE Connectivity ALL RIGHTS RESERVED.

REVISIONS					
P	LTR	DESCRIPTION	DATE	DWN	APVD
	A	NEW DRAWING	20MAR2017	GK	DB
	F	LINER CHANGE	18SEP2018	GK	DB

LABEL AND LINER DESIGN

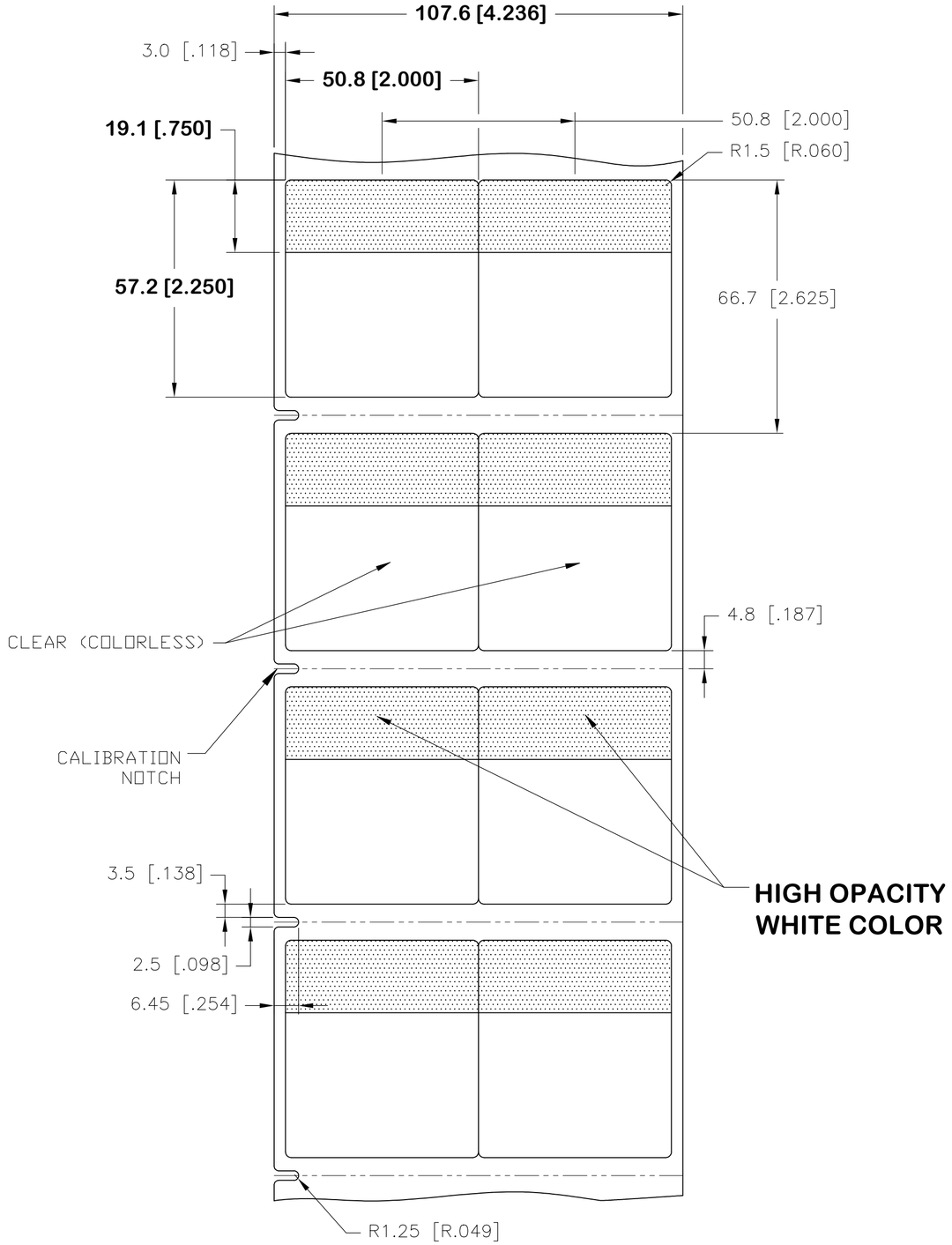

PRESENTATION

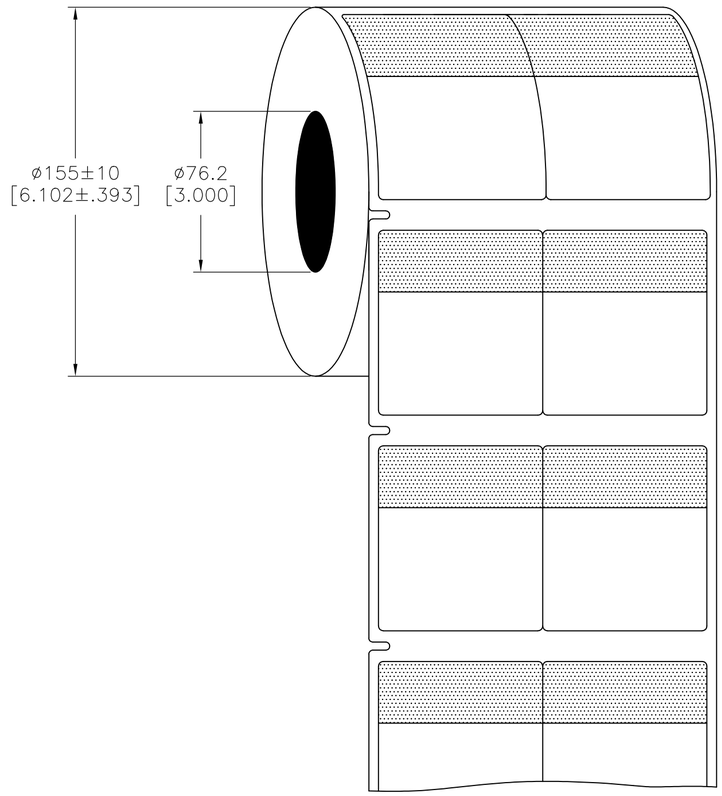

OUTSIDE WOUND
LABEL ACROSS: 2
PER ROLL QTY: 2500

All dimensions in mm [Inch]

TE PN: CN9933-000

MATERIAL	CLEAR VINYL
ADHESIVE TYPE	ACRYLIC PERMANENT
LINEAR	WHITE KRAFT

UL-MARKING AND LABELLING SYSTEMS

PGIS2 - Marking and Labeling Systems, Limited Use - Component (UL 969)

File: MH61871 | Product design: **SBP** | Ribbon: TMS-XXX-RIBBON-4RPSCE

TOLERANCES mm [INCH]	
LABEL HEIGHT:	±0.3 [.012]
LABEL WIDTH:	±0.3 [.012]
WEB WIDTH:	±0.8 [.031]
VERTICAL REPEAT:	±0.8 [.031]*
HORIZONTAL REPEAT:	±0.8 [.031]*
PRINT POSITIONING:	±0.8 [.031]*
LEFT MARGIN:	±0.4 [.016]
QUANTITY:	−0 % +2 %
*NON ACCUMULATING	

THIS DRAWING IS A CONTROLLED DOCUMENT.

DIMENSIONS: mm [INCHES]

TOLERANCES UNLESS OTHERWISE SPECIFIED:

0 PLC	± –
1 PLC	± –
2 PLC	± –
3 PLC	± –
4 PLC	± –
ANGLES	± –

MATERIAL: SEE TABLE

FINISH: GLOSSY

DWN	GOPALAKRISHNA HV 20MAR2017
CHK	D.BURGAT 20MAR2017
APVD	D.BURGAT 20MAR2017
PRODUCT SPEC	TTDS-211
APPLICATION SPEC	—
WEIGHT	0.404g

TE Connectivity

NAME: SBP LABEL – WHITE
50.8 x 57.2mm [2.00 x 2.25inch]
–

SIZE	CAGE CODE	DRAWING NO	RESTRICTED TO
A2	00779	C-SBP200225WE2.5	—

CUSTOMER DRAWING | SCALE NTS | SHEET 1 OF 1 | REV F

CN9933-000

1471-9 (1/15)