THIS DRAWING IS A CONTROLLED DOCUMENT.

REVISIONS				
REV	DESCRIPTION	DATE	DWN	APVD
AA	INITIAL RELEASE	30/10/2019	K.KW	D.W
AB	ECR-24-216901 (CRN 26424)	07/08/2024	N.H	R.S

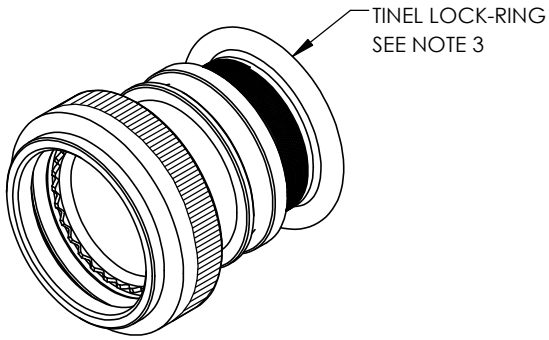

TXR40AB00-1608AIH

SERIES
- TXR: RING INCLUDED (SEE RING OPTION)
- TX: RING NOT INCLUDED

CONNECTOR INTERFACE
MATERIAL
FINISH
ANGLE
DASH NUMBER (TABLE 1)
ENTRY SIZE (TABLE 2)
RING OPTION
- AI - TO SUIT SINGLE BRAID
- BI - TO SUIT DOUBLE BRAID
- FOR TX, LEAVE BLANK

MODIFICATION CODE
- H MODIFICATION - HELICAL CONDUIT THREAD

NOTES:

1. THIS PRODUCT IS DESIGNED TO TERMINATE A BRAIDED CABLE SHIELD AND A HEAT SHRINKABLE LIPPED BOOT TO A CONNECTOR.
2. THE INFORMATION CONTAINED ON THIS DRAWING SUPERSEDES THAT SHOWN IN SS-CH00-0250-008.
3. SEE DRAWING TR FOR DETAIL ON TINEL-LOCK RING, RINGS ARE DESIGNED TO BE HEATED ELECTRICALLY, ALL RINGS ARE MARKED WITH THERMOCHROMIC PAINT WHICH CHANGES COLOUR WHEN INSTALLATION TEMPERATURE IS REACHED.
4. BACKSHELL TO BE PERMANENTLY MARKED/BAGGED AND LABELLED WITH CODE IDENTIFICATION NUMBER AND PART NUMBER LESS RING DESIGNATOR. (e.g. 06090-TX40AB00-1206H). RING SHALL BEAR NO MARKING.
5. FOR LARGER ENTRY SIZES, A 2 PIECE BACKSHELL ASSEMBLY (TYPE 2) IS SUPPLIED.
6. BACKSHELL MATES TO MIL-DTL-38999 SERIES III AND IV, CLASS C, F, K AND W, D38999/20, /24, /26, /40, /46 AND /47 CONNECTORS, AND WHEN SO MATED SHALL PROVIDE A WATER-TIGHT SEAL MEETING THE REQUIREMENTS OF MIL-C-85049, PARA. 3.5.7.

RELEASED FOR PUBLICATION
© COPYRIGHT 20 BY ALL RIGHTS RESERVED.
THIS DRAWING IS UNPUBLISHED.

DIMENSIONS: MILLIMETERS

TOLERANCES UNLESS OTHERWISE SPECIFIED:

GENERAL TOL
LINEAR ±0,25MM
ANGULAR ±1°

DWN: K.KUTA-WINCZURA 28/10/2019
CHK: D.WRIGLEY 30/10/2019
APVD: M.PAUL 30/10/2019
PRODUCT SPEC: –
APPLICATION SPEC: –
WEIGHT:

MATERIAL: SEE SS0076
FINISH: SEE SS0076

TE Connectivity

PART NUMBER: TXR40, H MODIFICATION

NAME: TINEL-LOCK BACKSHELL, H MODIFICATION

SIZE	CAGE CODE	DRAWING NO	RESTRICTED TO
A4	06090	C-P42532	

CUSTOMER DRAWING | SCALE 1:1 | SHEET 1 OF 3 | REV AB

1469-35 (3/13)

THIS DRAWING IS A CONTROLLED DOCUMENT.

REVISIONS

IF MAX ENTRY EXCEEDED, BACKSHELL WILL BE SUPPLIED AS TYPE 2

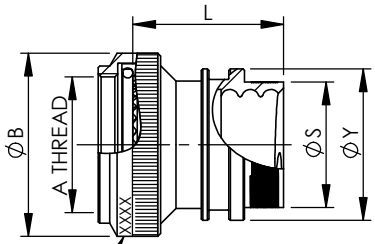

PART MARK AND BATCH NUMBER HERE

STRAIGHT BACKSHELL - TYPE 1

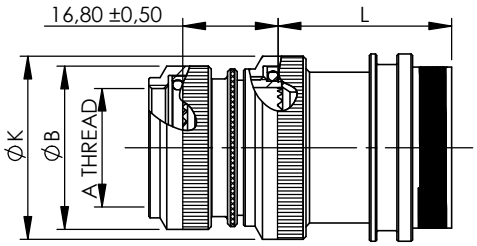

STRAIGHT BACKSHELL - TYPE 2

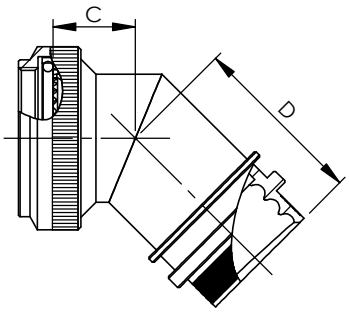

45° BACKSHELL - TYPE 1

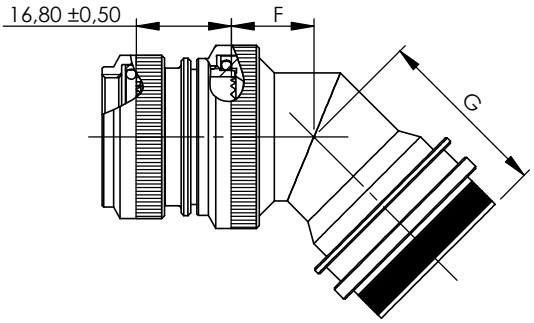

45° BACKSHELL - TYPE 2

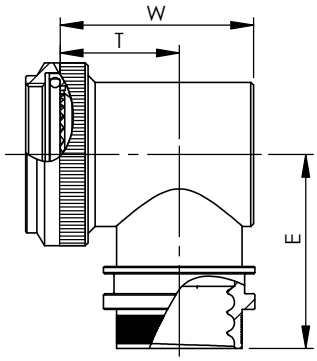

90° BACKSHELL - TYPE 1

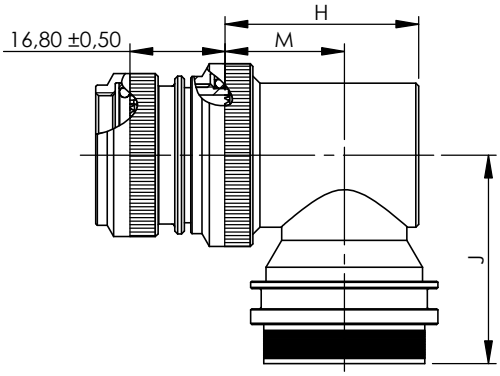

90° BACKSHELL - TYPE 2

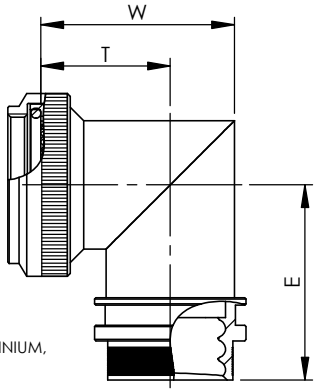

90° BACKSHELL - TYPE 1
STAINLESS STEEL, ANODISED ALUMINIUM,
NICKEL ALUMINIUM BRONZE

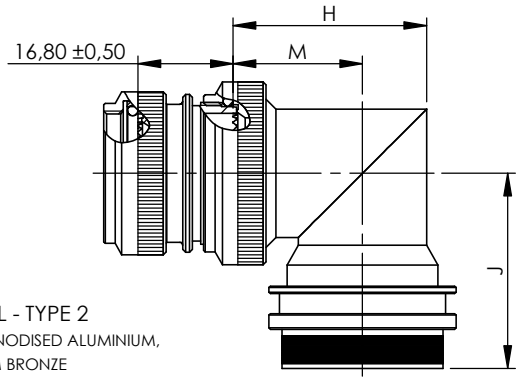

90° BACKSHELL - TYPE 2
STAINLESS STEEL, ANODISED ALUMINIUM,
NICKEL ALUMINIUM BRONZE

THIS DRAWING IS UNPUBLISHED. © COPYRIGHT 20 BY ALL RIGHTS RESERVED. RELEASED FOR PUBLICATION

DIMENSIONS: MILLIMETERS	DWN: K.KUTA-WINCZURA 28/10/2019	MATERIAL: SEE SS0076	FINISH: SEE SS0076
TOLERANCES UNLESS OTHERWISE SPECIFIED:	CHK: D.WRIGLEY 30/10/2019	TE Connectivity	
GENERAL TOL LINEAR ±0,25MM ANGULAR ±1°	APVD: M.PAUL 30/10/2019	PART NUMBER: TXR40, H MODIFICATION	
	PRODUCT SPEC: –	NAME: TINEL-LOCK BACKSHELL, H MODIFICATION	
	APPLICATION SPEC: –	SIZE A4 / CAGE CODE 06090 / DRAWING NO C-P42532	RESTRICTED TO
	WEIGHT:		
CUSTOMER DRAWING		SCALE 0.75:1 / SHEET 2 OF 3	REV AB

1469-35 (3/13)

THIS DRAWING IS A CONTROLLED DOCUMENT.

REVISIONS

TABLE 1

ORDER NO.	SHELL SIZE COM'L/MIL	A THREAD	B MAX	MAX ENTRY	C +/-0,5	D MAX	W +/-0,5	T +/-0,5	E MAX	W +/-0,5 (DIMENSIONS APPLY FOR STAINLESS STEEL AND NICKEL ALUMINIUM BRONZE BACKSHELLS)	T +/-0,5	E MAX
08	9 / A	M12 x 1.0	18,00	06	12,0	28,6	21,0	14,0	28,0	21,2	16,3	28,2
10	11 / B	M15 x 1.0	21,00	09	12,5	29,3	24,0	15,5	29,7	24,3	17,2	30,0
12	13 / C	M18 x 1.0	24,50	10	13,1	30,3	27,0	17,0	31,7	28,3	19,4	32,0
14	15 / D	M22 x 1.0	29,00	12	13,5	31,3	31,0	19,5	33,3	31,1	21,0	33,5
16	17 / E	M25 x 1.0	32,50	16	14,5	34,5	34,0	21,0	37,5	34,2	22,8	37,7
18	19 / F	M28 x 1.0	35,50	18	15,5	38,3	35,0	20,0	42,0	38,5	25,3	42,3
20	21 / G	M31 x 1.0	37,00	20	16,1	38,7	38,0	21,5	43,6	40,7	26,1	43,9
22	23 / H	M34 x 1.0	40,00	20	16,5	38,9	42,0	24,0	45,2	43,7	27,6	45,4
24	25 / J	M37 x 1.0	43,50	24	17,0	46,4	45,0	25,5	53,2	46,4	29,1	53,4

TABLE 2

ENTRY SIZE	CONDUIT SIZE	S	Y	L	K MAX	F +/-0,5	G +/-0,5	H +/-0,5	M +/-0,5	J +/-0,5	H +/-0,5 (DIMENSIONS APPLY FOR STAINLESS STEEL AND NICKEL ALUMINIUM BRONZE BACKSHELLS)	M +/-0,5	J +/-0,5
05	0187	11,06 +/-0,04	15,5	27,5	NA	NA	NA	NA	NA	NA	NA	NA	NA
06	0281	12,66 +/-0,04	17,1	27,5	NA	NA	NA	NA	NA	NA	NA	NA	NA
07	0312	14,21 +/-0,07	18,7	27,5	21,0	12,5	28,5	24,0	15,5	29,0	24,3	17,2	29,2
08	0375	15,81 +/-0,07	20,3	27,5	21,0	12,5	28,5	24,0	15,5	29,0	24,3	17,2	29,2
09	0437	18,96 +/-0,08	23,5	27,5	21,0	12,5	28,5	24,0	15,5	29,0	24,3	17,2	29,2
10	0500	18,96 +/-0,08	23,5	28,0	24,5	13,1	29,5	27,0	17,0	31,0	28,3	19,4	31,2
12	0625	22,14 +/-0,08	26,7	28,0	29,0	13,5	30,5	31,0	19,5	32,5	31,1	21,0	32,7
16	0750	28,48 +/-0,08	33,0	30,5	32,5	14,5	33,7	34,0	21,0	36,7	34,2	22,8	36,9
18	0875	31,65 +/-0,08	36,2	33,5	35,5	15,5	37,5	35,0	20,0	41,3	38,5	25,3	41,5
20	1000	34,83 +/-0,08	39,4	33,5	37,0	16,1	37,9	38,0	21,5	42,8	40,7	26,1	43,1
24	1250	41,15 +/-0,08	42,5	40,0	43,5	17,0	45,6	45,0	25,5	52,4	46,4	29,1	52,6

RELEASED FOR PUBLICATION
THIS DRAWING IS UNPUBLISHED.
© COPYRIGHT 20 BY
ALL RIGHTS RESERVED.

DIMENSIONS: MILLIMETERS

TOLERANCES UNLESS OTHERWISE SPECIFIED:

GENERAL TOL
LINEAR ±0,25MM
ANGULAR ±1°

DWN: K.KUTA-WINCZURA 28/10/2019
CHK: D.WRIGLEY 30/10/2019
APVD: M.PAUL 30/10/2019
PRODUCT SPEC: –
APPLICATION SPEC: –
WEIGHT:

MATERIAL: SEE SS0076
FINISH: SEE SS0076

TE Connectivity

PART NUMBER: TXR40, H MODIFICATION

NAME: TINEL-LOCK BACKSHELL, H MODIFICATION

SIZE	CAGE CODE	DRAWING NO	RESTRICTED TO
A4	06090	C-P42532	

CUSTOMER DRAWING

SCALE 1:1 | SHEET 3 OF 3 | REV AB

1469-35 (3/13)