THIS DRAWING IS UNPUBLISHED. RELEASED FOR PUBLICATION -,- .
© COPYRIGHT - TE Connectivity ALL RIGHTS RESERVED.

REVISIONS

P	LTR	DESCRIPTION	DATE	DWN	APVD
	A	ORIGINAL ISSUE	12MAR2020	RS	KP

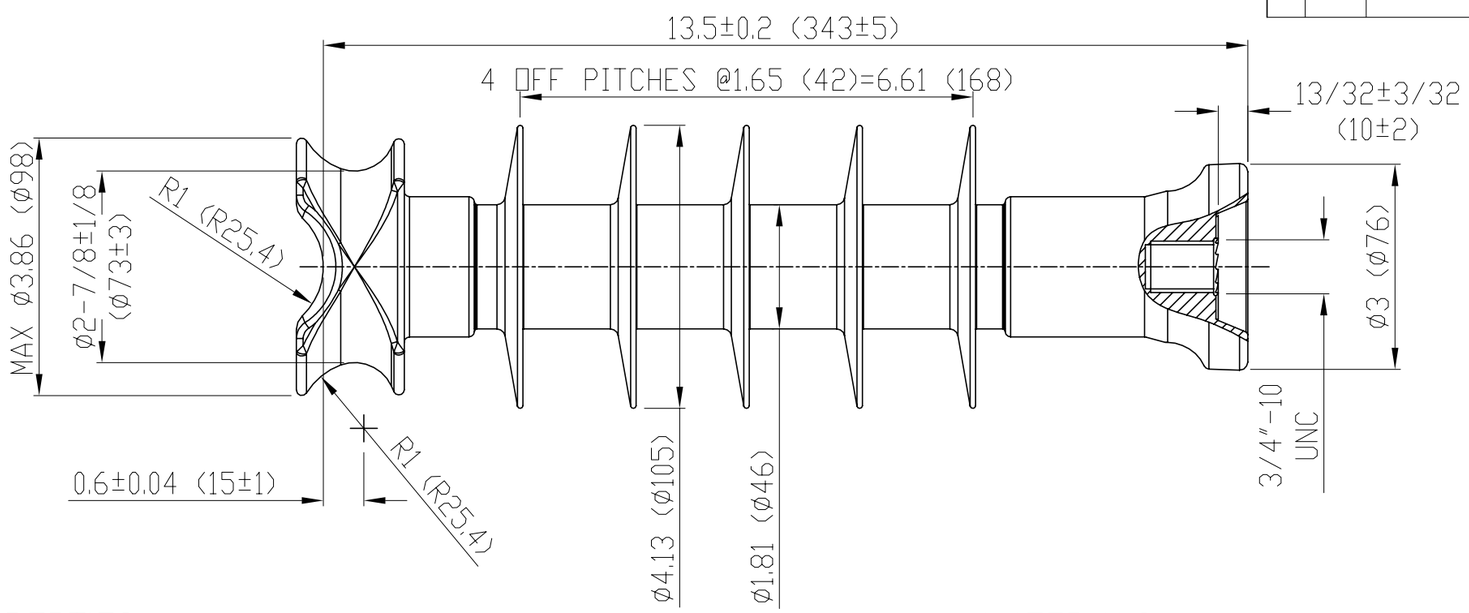

PHYSICAL PROPERTIES:

1. NOMINAL CREEPAGE DISTANCE	:	18.11 (460)
2. NOMINAL DRY ARCING DISTANCE	:	8.86 (225)

ELECTRICAL PROPERTIES:

1. LOW FREQUENCY DRY FLASHOVER VOLTAGE	:	95 kV
2. LOW FREQUENCY WET FLASHOVER VOLTAGE	:	70 kV
3. POSITIVE IMPULSE FLASHOVER VOLTAGE	:	155 kV
4. RIV TEST VOLTAGE	:	15 kV
5. MAX. RIV @ 1 MHz	:	100 µV

MECHANICAL PROPERTIES:

1. SPECIFIED CANTILEVER LOAD (SCL)	:	2400 lbs
2. SPECIFIED TENSILE LOAD (STL)	:	2000 lbs

MATERIALS:

1. CORE	:	ECR FIBERGLASS REINFORCED POLYMER
2. HOUSING	:	SILICONE RUBBER
3. END FITTINGS	:	HOT DIP GALVANISED STEEL
4. STANDARDS	:	ANSI C29.1 & ANSI C29.18

PRODUCT MARKINGS:
1. TE LOGO
2. YEAR & MONTH
3. 51-2F
4. BATCH NO #

TCPN
EP4093-000

NOTES:
UNSPECIFIED TOLERANCE
1) ±(0.04 x d + 0.06)inches WHEN d < 11.8 inches
2) ±(0.025 x d + 0.23)inches WHEN d > 11.8 inches
WITH MAX. TOLERANCE OF ±2 inches

THIS DRAWING IS A CONTROLLED DOCUMENT.

DIMENSIONS: Inches[mm]

TOLERANCES UNLESS OTHERWISE SPECIFIED:
0 PLC ± 1
1 PLC ± 0.1
2 PLC ± 0.01
3 PLC ± 0.001
4 PLC ± 0.0001
ANGLES ± 1

MATERIAL -
FINISH -

DWN RAVI S 12MAR2020
CHK K PUSHTAY 12MAR2020
APVD K PUSHTAY 12MAR2020
PRODUCT SPEC —
APPLICATION SPEC —
WEIGHT Approx 3.3 Kg

TE Connectivity

NAME TE-LP25-FS1-01

SIZE	CAGE CODE	DRAWING NO	RESTRICTED TO
A3	00779	C-INS1493	—

CUSTOMER DRAWING | SCALE 1:1 | SHEET 1 OF 1 | REV A