THIS DRAWING IS UNPUBLISHED. RELEASED FOR PUBLICATION 2015
© COPYRIGHT 2015 BY - TE CONNECTIVITY ALL RIGHTS RESERVED.

LOC	DIST
-	-

REVISIONS

P	LTR	DESCRIPTION	DATE	DWN	APVD
	A1	REVISED PER ECO-15-001798	19MAR2015	VNB	DM
	A2	REVISED PER PCN E-20-000705	27JAN2020	PK	DM
	B	REVISED PER PCN-24-219560	30AUG2024	CO	CB
	C	REVISED PER PCN-25-233530	13DEC2024	RK	CB

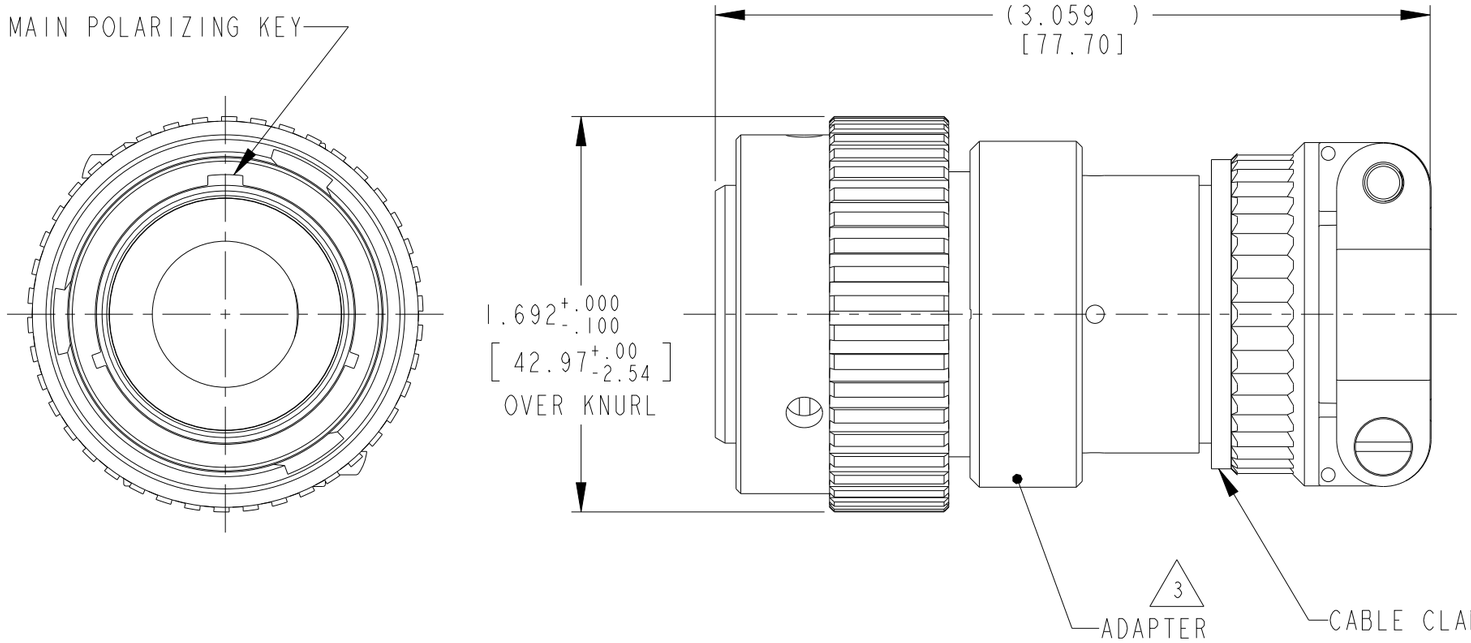

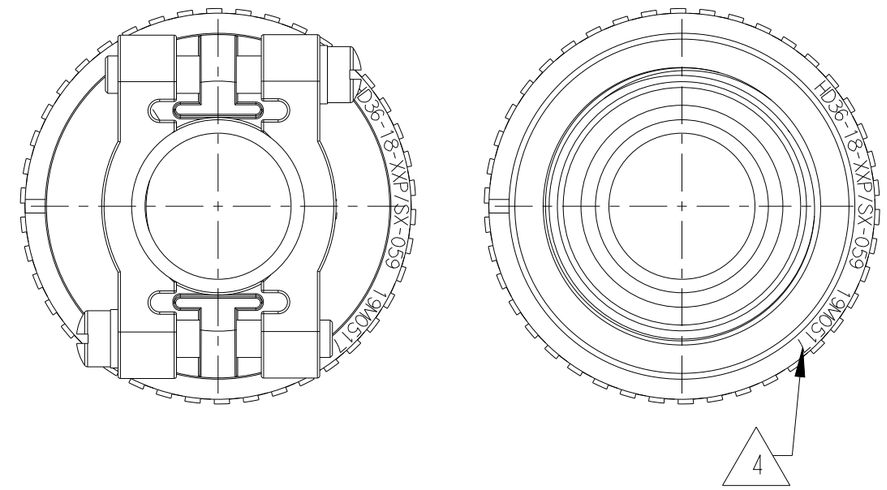

CABLE CLAMP ASSEMBLY HIDDEN VIEW

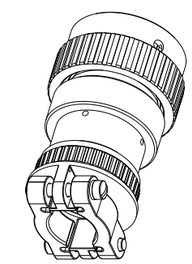

3D VIEW

4 DATE CODE: IDENTIFIES THE YEAR,MONTH,DAY AND HOUR OF ASSEMBLY.
YEAR: FIRST AND SECOND DIGITS. (14=2014)
MONTH: THIRD DIGIT,EXCLUDING 1.A=JAN.,B=FEB.,C=MARCH...(K=OCT.)
DAY: FOURTH AND FIFTH DIGITS (14=14th DAY)
HOUR: SIXTH AND SEVENTH DIGITS (11=11AM)

3 MATERIAL:
ADAPTER: 6061-T6 ALUMINIUM ALLOY,
RETAINER RING: PA66 GF10,
GROMMET: SILICONE VMQ (RED).

2. THE CONNECTOR MATES WITH HD34-18-XXS/PX-XXXX
X = SEAL DESIGNATION, XX = NUMBER OF CAVITIES,
XXXX = MODIFICATION DESIGNATION.

1. FOR ARRANGEMENT OF CONTACT LOCATION SEE ENVELOPE
DRAWING 0425-013-1800

NOTES:

THIS DRAWING IS A CONTROLLED DOCUMENT.

DIMENSIONS: INCHES[mm]

TOLERANCES UNLESS OTHERWISE SPECIFIED:
0 PLC ±-
1 PLC ±-
2 PLC ±-
3 PLC ±.010 [±.254]
4 PLC ±-
ANGLES ±0° 30′0"

MATERIAL 3

FINISH -

DWN	A. MALAGON	08FEB2007
CHK	B. BAYFORD	14JUL2011
APVD	S. BEARD	12JUL2011
PRODUCT SPEC	108-151014	
APPLICATION SPEC	114-151014	
WEIGHT	114g	

TE Connectivity

NAME: PLUG CONNECTOR SHELL SIZE 18 BAYONET COUPLING-059 MOD. HD30 SERIES

SIZE	CAGE CODE	DRAWING NO	RESTRICTED TO
A3	-	C-HD36-18-XXP/SX-059	-

Customer Drawing | SCALE NONE | SHEET 1 OF 1 | REV C

1470-19 (3/11)