© 2023 TE Connectivity. All Rights Reserved.

REVISIONS					
P	LTR	DESCRIPTION	DATE	DWN	APVD
	A	INITIAL RELEASE	30MAY2023	AD	CW

CODING A

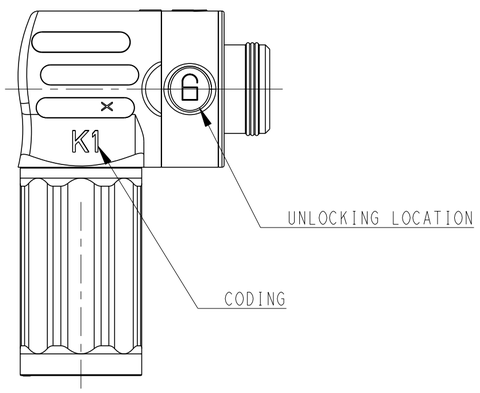

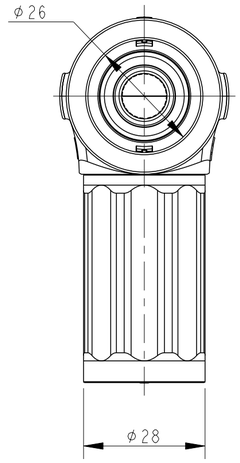

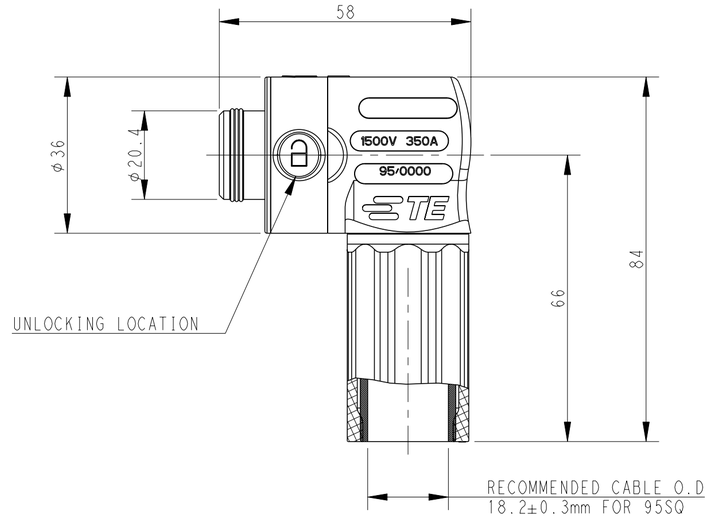

SECTION A-A

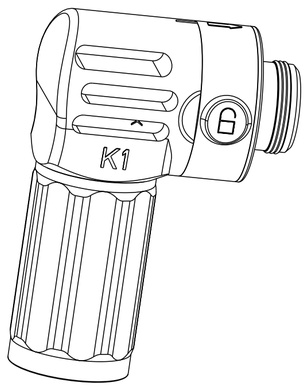

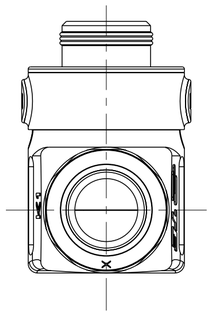

CODING A

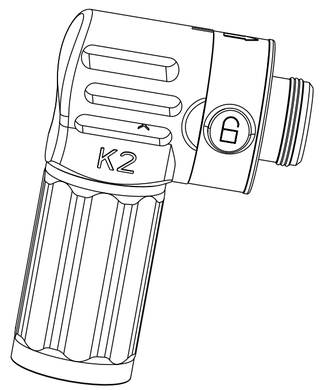

CODING B

NOTES:

1. TECHNICAL CHARACTERISTICS:
   RATED VOLTAGE: 1500V
   RATED CURRENT: 350A
   INSULATION RESISTANCE: >=5000MΩ
   RATED WITHSATAND VOLTAGE: 6.8KV
   POLLUTION DEGREE: 3
   CONTACT RESISTANCE: <0.15mΩ
   PROTECTION CLASS: IP67 (MATED)
   MATING CYCLES: 500 CYCLES
   OPERATION TEMPERATURE: -40°C~+125°C
   COLOR: ORANGE / BLACK
   CODING: A/B

注释:

1. 技术参数:
   额定电压: 1500V
   额定电流: 350A
   绝缘电阻: >=5000MΩ
   额定耐电压: 6.8KV
   污染等级: 3
   接触电阻: <0.15mΩ
   防护等级: IP67(配合)
   插拔次数: 500次
   工作温度: -40°C~+125°C
   颜色: 橙色 / 黑色
   键位: A/B

CODING B

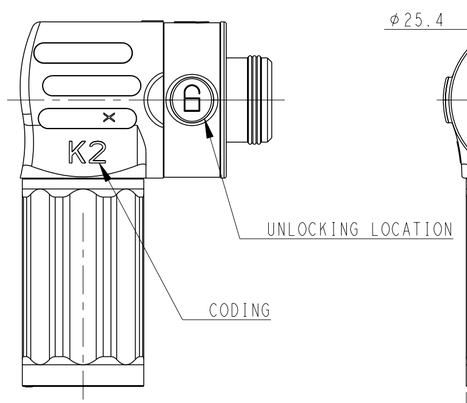

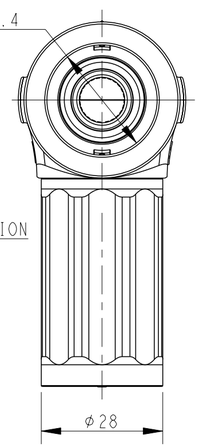

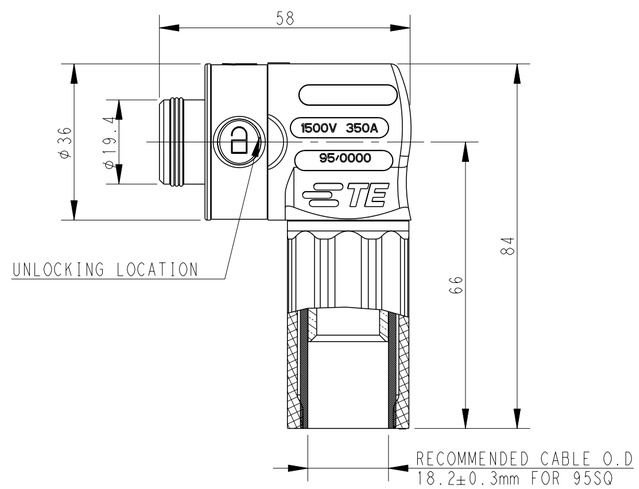

SECTION B-B

PART NUMBER 料号	DESCRIPTION 描述
H1131011501-000	HPC,350A,FEMALE PLUG,BLACK CONNECTOR,SIGNLE,CODING B HPC,350A母端插头黑色单芯连接器,B键位
H1131010501-000	HPC,350A,FEMALE PLUG,ORANGE CONNECTOR,SIGNLE,CODING B HPC,350A母端插头橙色单芯连接器,B键位
H1131001501-000	HPC,350A,FEMALE PLUG,BLACK CONNECTOR,SIGNLE,CODING A HPC,350A母端插头黑色单芯连接器,A键位
H1131000501-000	HPC,350A,FEMALE PLUG,ORANGE CONNECTOR,SIGNLE,CODING A HPC,350A母端插头橙色单芯连接器,A键位

THIS DRAWING IS A CONTROLLED DOCUMENT.

DIMENSIONS: mm

TOLERANCES UNLESS OTHERWISE SPECIFIED:
0 PLC ±-
1 PLC ±-
2 PLC ±-
3 PLC ±-
4 PLC ±-
ANGLES ±-

MATERIAL - -

FINISH - -

DWN Alan Dong 30MAY2023
CHK Gino Yao 30MAY2023
APVD Chris Wang 30MAY2023

PRODUCT SPEC 108-137616
APPLICATION SPEC 114-137616
WEIGHT -

TE Connectivity

NAME HPC-350-095-F-P-XX-01-X

SIZE	CAGE CODE	DRAWING NO	RESTRICTED TO
A2	00779	C-H11310XX501000	-

CUSTOMER DRAWING | SCALE 1:1 | SHEET 1 OF 1 | REV A

printed on 29 Apr 2024 11:21 (China Standard Time) from TE343936