DWG NO FDBA_XXH_++

USED ON _

FDBA 50H

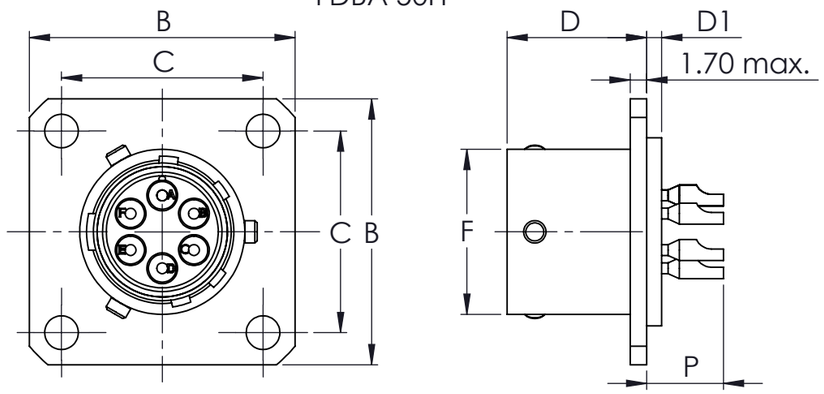

For printed circuit boards FDBA 50H-**-A276A

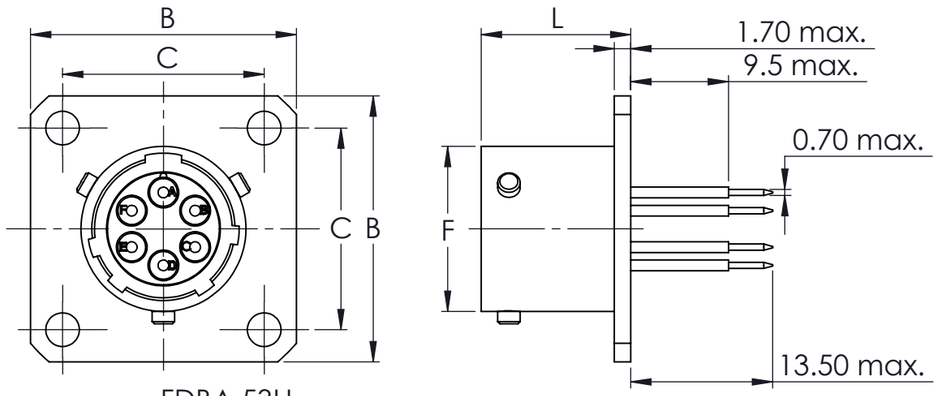

FDBA 50H & FDBA 50H-**-A276A

Size Taille	B max.	C ±0.1	D ±0.15	D1 max.	F max.	L max.	P max. Sizes/Tailles 20	P max. Sizes/Tailles 16
08	21.00	15.08	12.65	1.55	12.03	13.75	6.85	8.95
10	24.25	18.26	12.65	1.55	15.01	13.75	6.85	8.95
12	26.60	20.62	12.65	1.55	19.07	13.75	6.85	8.95
14	29.00	23.02	12.65	1.55	22.24	13.75	6.85	8.95
16	31.30	24.58	12.65	1.55	25.42	13.75	6.85	8.95
18	33.70	26.98	12.65	1.55	28.60	13.75	6.85	8.95
20	36.85	29.36	14.09	2.25	31.77	15.35	7.10	9.20
22	39.95	31.76	14.09	2.25	34.94	15.35	7.10	9.20
24	43.15	34.92	14.93	2.25	38.12	15.35	6.25	8.35

FDBA 53H

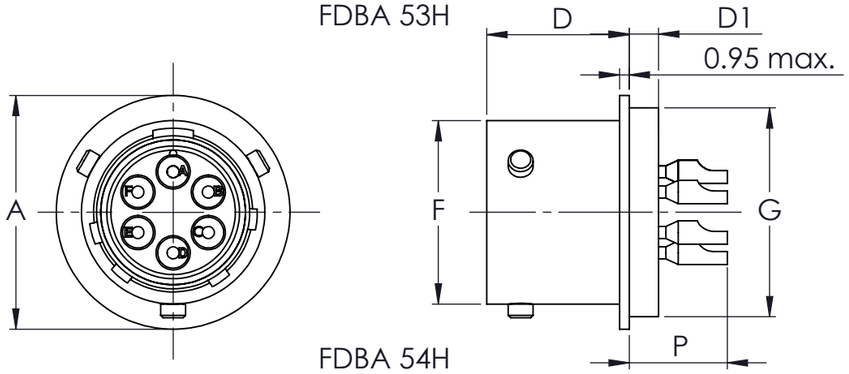

FDBA 53H

Size Taille	A max.	D ±0.5	D1 max.	F max.	G max.	P max. Sizes/Tailles 20	P max. Sizes/Tailles 16
08	16.10	11.50	2.60	12.03	14.35	7.95	10.00
10	19.25	11.50	2.60	15.01	17.15	7.95	10.00
12	21.65	11.50	2.60	19.07	19.90	7.95	10.00
14	24.85	11.50	2.60	22.24	23.10	7.95	10.00
16	28.00	11.50	2.60	25.42	26.25	7.95	10.00
18	31.15	11.50	2.60	28.60	29.45	7.95	10.00
20	33.55	13.11	3.35	31.77	31.80	8.20	10.30
22	36.70	13.11	3.35	34.94	35.00	8.20	10.30
24	39.90	13.95	3.35	38.12	38.15	7.35	9.50

FDBA 54H

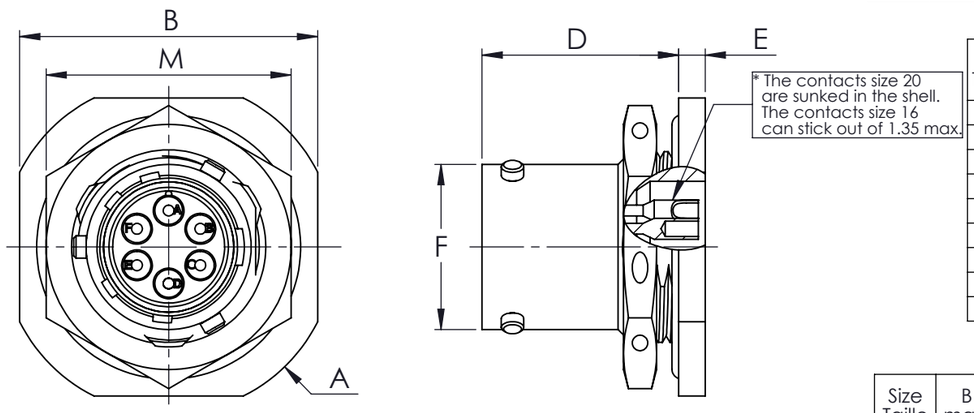

FDBA 54H

Size Taille	A max.	B max.	D ±0.15	E max.	F max.	M max.
08	27.30	24.00	17.81	2.50	12.03	19.20
10	30.50	27.20	17.81	2.50	15.01	22.37
12	35.30	32.00	17.81	2.50	19.07	27.12
14	38.40	35.10	17.81	2.50	22.24	30.30
16	41.60	38.30	17.81	2.50	25.42	33.47
18	44.80	41.50	17.81	2.50	28.60	36.67
20	49.60	46.20	22.58	3.30	31.77	39.82
22	52.70	49.40	22.58	3.30	34.94	43.02
24	55.90	52.60	23.67	3.30	38.12	46.17

FDBA 58H

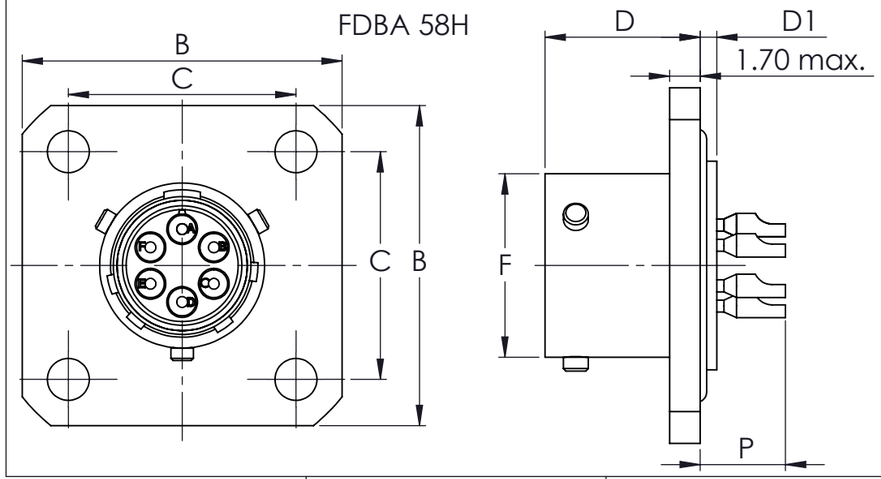

FDBA 58H

Size Taille	B max.	C ±0.1	D ±0.15	D1 max.	F max.	P max. Sizes/Tailles 20	P max. Sizes/Tailles 16
08	26.50	18.10	12.65	1.55	12.03	6.85	8.95
10	29.10	20.62	12.65	1.55	15.01	6.85	8.95
12	32.25	23.82	12.65	1.55	19.07	6.85	8.95
14	34.65	26.18	12.65	1.55	22.24	6.85	8.95
16	37.00	28.57	12.65	1.55	25.42	6.85	8.95
18	39.05	30.55	12.65	1.55	28.60	6.85	8.95
20	43.00	32.94	14.09	2.25	31.77	7.10	9.20
22	44.95	34.92	14.09	2.25	34.94	7.10	9.20
24	48.15	38.10	14.93	2.25	38.12	6.25	8.35

Example of order : FDBA X X H XX - XX X X - K XXXX

CONNECTOR TYPE
Standard and Hermetic

VERSION
5 - Standard
6 - Stainless steel Nickel Plating
7 - Passivated Stainless steel

SHELL TYPE
0 Square Flange Receptacle
3 Solder Receptacle
4 Jam-nut Mounting Receptacle
8 Large Square Flange

VERSION
H - Hermetic

SHELL SIZE
08-10-12-14-16-18-20-22-24

ARRANGEMENTS
As per EN3646

CONTACT TYPE
P Male Contact
S Female Contact

INSERT CLOCKING POSITION
N Normal
W-X-Y-Z Others

INDEX
Connector Evolution

SPECIAL MODIFIATIONS
059 Straight Cable Clamp
081 Elbowed Cable Clamp
090 Delivery without contact
A246 Size 20 contact in accordance with ASNE
A499 Nickel version connector
A838 Olive drab cadmium
B246 Hybrid arrangement size 20 & 16 in accordance with ASNE
A377 PC tail connector

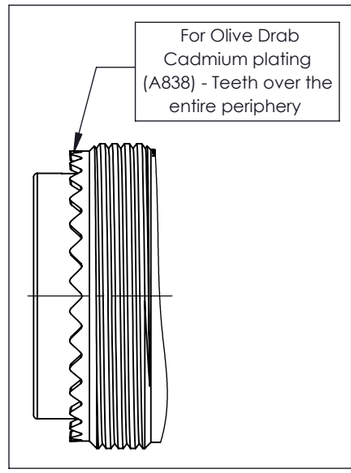

CHARACTERISTIQUES

1. Shell material : Stainless steel
2. Insert material : Sintered glass insert
3. Plating : Nickel
4. Service Temperature : -55°C to + 200°C
5. Service Voltage : 500 V eff. 50 Hz

DIMENSIONS: MM

TOLERANCES UNLESS OTHERWISE SPECIFIED:
0 PLC ±-
1 PLC ±-0.05
2 PLC ±-0.05
3 PLC ±-0.02
4 PLC ±-

ANGLES ±-°

SURFACE TEXTURE

DWN LAKSHMI SUDHA R	MATERIAL – –	HEAT TREAT – –	
CHK RAKESH S	TE Connectivity		
APVD VINCENT P			
NAME FDBA SERIES CONNECTOR (HERMETIC)			
SCALE 2:1	SIZE A3	DRAWING NO FDBA_XXH_++	SHEET 1 OF 1	REV A

THIS DRAWING IS A CONTROLLED DOCUMENT

THIS INFORMATION IS CONFIDENTIAL AND PROPRIETARY TO TYCO ELECTRONICS CORPORATION AND ITS WORLDWIDE SUBSIDIARIES AND AFFILIATES (TE). IT MAY NOT BE DISCLOSED TO ANYONE, OTHER THAN TE PERSONNEL, WITHOUT AUTHORIZATION FROM TE (www.TE.com).

3306-7 (3/13)