© 2023 TE Connectivity. All Rights Reserved.

| REVISIONS | | | | | |
|---|---|---|---|---|---|
| P | LTR | DESCRIPTION | DATE | DWN | APVD |
| | A | ECN-23-225202 TE STANDARD | 14 JUL 2023 | KS | RB |

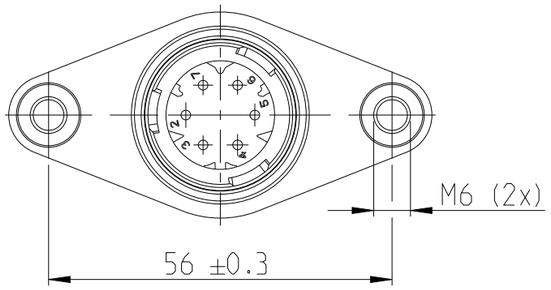


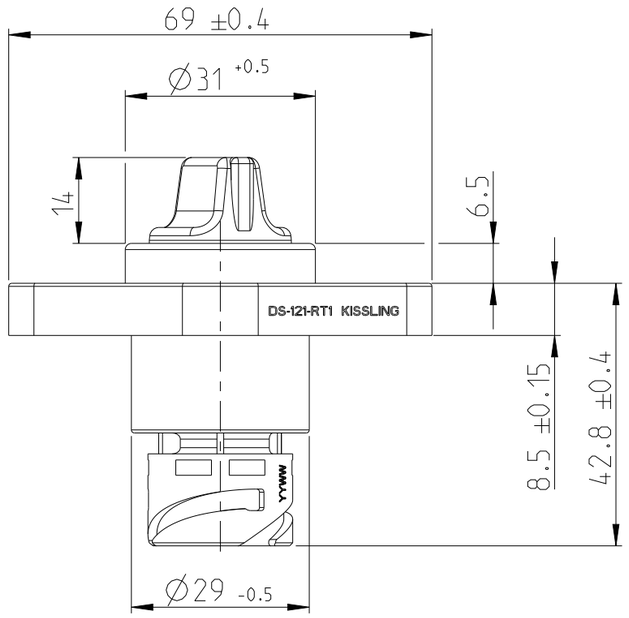


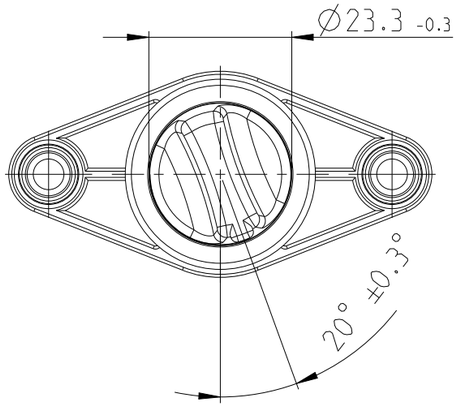


## TECHNICAL DATA

### CONSTRUCTION

SOCKET MATERIAL.....PA BLACK
ROTARY KNOB MATERIAL.....PA RED
PROTECTION INTERIOR.....IP6K9K IEC 60529
CONNECTOR.....IP00 IEC 60529
MAX. TORQUE (M6).....10 Nm

### MECHANICAL DATA

TOTAL TRAVEL.....40°±3°
CURRENT CARRYING PARTS.....Cu-ALLOY
CONTACT MATERIAL.....Ag-ALLOY
MECHANICAL LIFE.....100000 CYCLES
TEMPERATURE RANGE.....-40°C TO +90°C

### ELECTRICAL DATA

VOLTAGE RANGE.....9VDC TO 32VDC
ELECTRICAL LOAD.....10mA TO 5A

## Technische Daten

### Aufbau

Sockelwerkstoff.....PA schwarz
Drehknopfwerkstoff.....PA rot
Schutzart Innenraum.....IP6K9K IEC 60529
Anschlüsse.....IP00 IEC 60529
Max. Drehmoment (M6).....10Nm

### Mechanische Daten

Gesamtweg.....40°±3°
Stromführende Teile.....Cu-Legierungen
Kontaktwerkstoff.....Ag-Legierungen
Mechanische Lebensdauer.....100000 Schaltspiele
Umgebungstemperatur.....-40°C bis +90°C

### Elektrische Daten

Nennspannung.....9VDC bis 32VDC
Elektrische Last.....10mA bis 5A

NOTES
Bemerkungen

1 TE-CONNECTIVITY ORDER-NUMBER
TE-Connectivity Bestellnummer

CIRCUIT DIAGRAM
Schaltbild

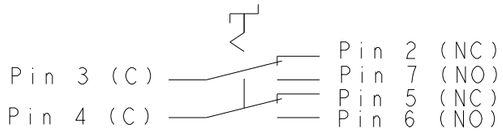


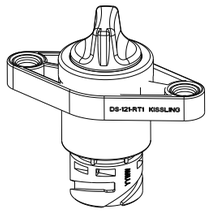


ISO 1:2

| TE ORDER-NO. | REV. | DESCRIPTION | WEIGHT [g] | ITEM NO. |
|---|---|---|---|---|
| K1145357 1 | A | ROTARY SWITCH Drehschalter | 41 | 1 |

PARTS LIST

THIS DRAWING IS A CONTROLLED DOCUMENT.

| DIMENSIONS: mm | TOLERANCES UNLESS OTHERWISE SPECIFIED: DIN ISO 2768 cL |
|---|---|
| | 0 PLC ± |
| | 1 PLC ± |
| | 2 PLC ± |
| | 3 PLC ± |
| | 4 PLC ± |
| | ANGLES ± |
| MATERIAL | FINISH |

DWN C.Drechsler 28SEP2014
CHK C.Drechsler 28SEP2014
APVD C.Drechsler 19JUL2018
PRODUCT SPEC –
APPLICATION SPEC –
WEIGHT –

TE Connectivity

NAME ROTARY SWITCH
Drehschalter

| SIZE | CAGE CODE | DRAWING NO | RESTRICTED TO |
|---|---|---|---|
| A3 | 00779 | C-DS-121-RT1 | – |

CUSTOMER DRAWING

SCALE 1:1 | SHEET 1 OF 1 | REV A