© 2021 TE Connectivity. All Rights Reserved.

REVISIONS					
P	LTR	DESCRIPTION	DATE	DWN	APVD
	B	REVISED PER PCN-21-118564	04MAR2022	DRK	CB

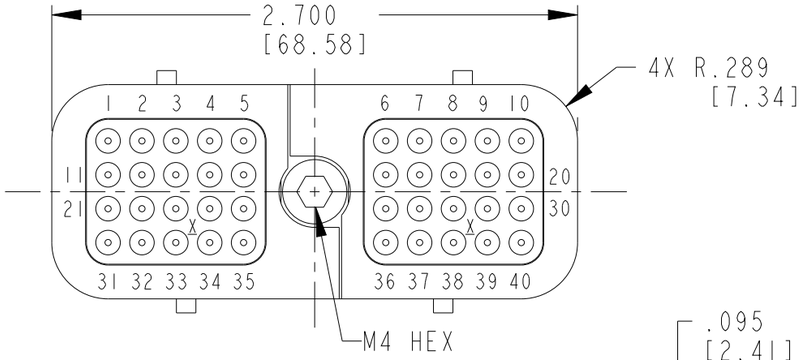

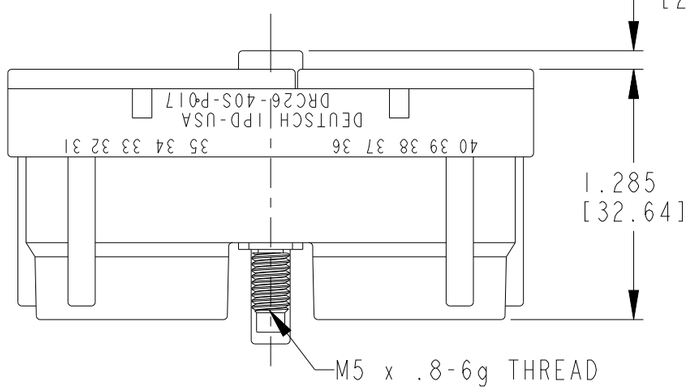

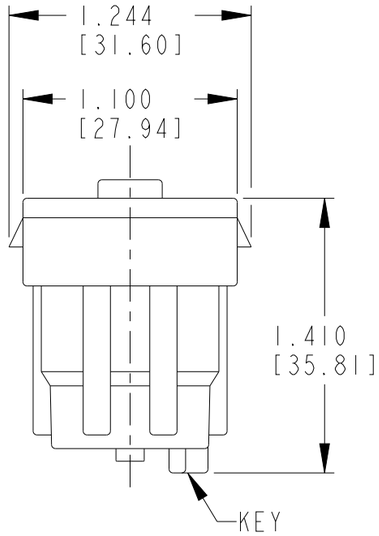

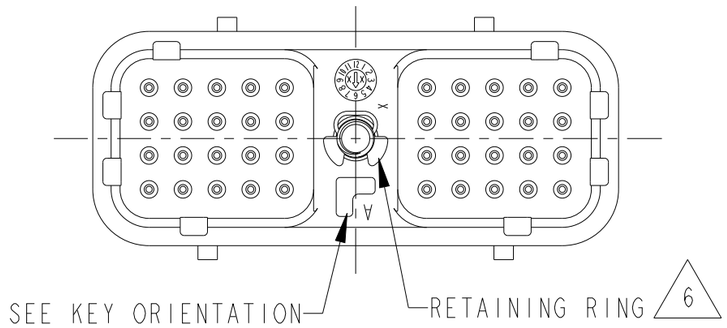

DRC26-40SA-P017

DRC26-40SB-P017

DRC26-40SC-P017

DRC26-40SD-P017

KEY ORIENATATION

TCPN	ALIAS PART NUMBER
DRC26-40SA-P017	DRC26-40SA-P017
DRC26-40SB-P017	DRC26-40SB-P017
DRC26-40SC-P017	DRC26-40SC-P017
DRC26-40SD-P017	DRC26-40SD-P017

CONTACT SIZE	MIN. INSUL. O.D.	MAX. INSUL. O.D.	WIRE RANGE 2 [mm²] REF ONLY
20	.040 [1.016]	.095 [2.413]	16-20 AWG [1.0-0.5]

6 PART MODIFICATION: RETAINING RING IS STAINLESS STEEL.

5 MATERIAL: HOUSING: PPS 40% GF (BLACK); BOLT: STEEL, TRIVALENT ZINC PLATED (ROHS COMPLIANT); GROMMET: VMQ

4. RECOMMENDED RETAINING BOLT TORQUE: 25-28 IN-LB [2.82-3.16 NM].

3. THIS PLUG MATES WITH DRC23-40P*-**** RECEPTACLE. (* = A,B,C,D KEYS; **** = ALL MODIFICATIONS)

2 FOR CONTACT AND WIRE PERFORMANCE AND APPLICATION CHARACTERISTICS SEE ENVELOPE DRAWING 0425-015-0000.

1. PLUG IS SUPPLIED WITH DUST CAP (NOT SHOWN).

NOTES: UNLESS OTHERWISE SPECIFIED

THIS DRAWING IS A CONTROLLED DOCUMENT.

DIMENSIONS: INCHES [mm]

TOLERANCES UNLESS OTHERWISE SPECIFIED:
0 PLC ±-
1 PLC ±-
2 PLC ±-
3 PLC ±.025 [.635]
4 PLC ±-
ANGLES ±-

MATERIAL 5

FINISH - -

DWN J APOSTOL 17MAR2005
CHK R MESSENGER 31MAR2005
APVD R RRED 31MAR2005
PRODUCT SPEC 108-151052
APPLICATION SPEC -
WEIGHT -

TE Connectivity

NAME PLUG 40 CONTACTS, SIZE 20 P017 MOD DRC SERIES

SIZE	CAGE CODE	DRAWING NO	RESTRICTED TO
A3	00779	C-DRC26-40SX-P017	-

CUSTOMER DRAWING | SCALE 1.25 | SHEET 1 OF 1 | REV B

1470-19 (3/13)