THIS DRAWING IS UNPUBLISHED. RELEASED FOR PUBLICATION 20
© COPYRIGHT 2015 BY - TE CONNECTIVITY ALL RIGHTS RESERVED.

LOC	DIST
–	–

REVISIONS

P	LTR	DESCRIPTION	DATE	DWN	APVD
	A	NEW DRAWING	06JUL2016	MGM	CE
	A1	REVISED PER PCN E-19-012270	05AUG2019	MK	PV

SECTION A-A
Schnitt

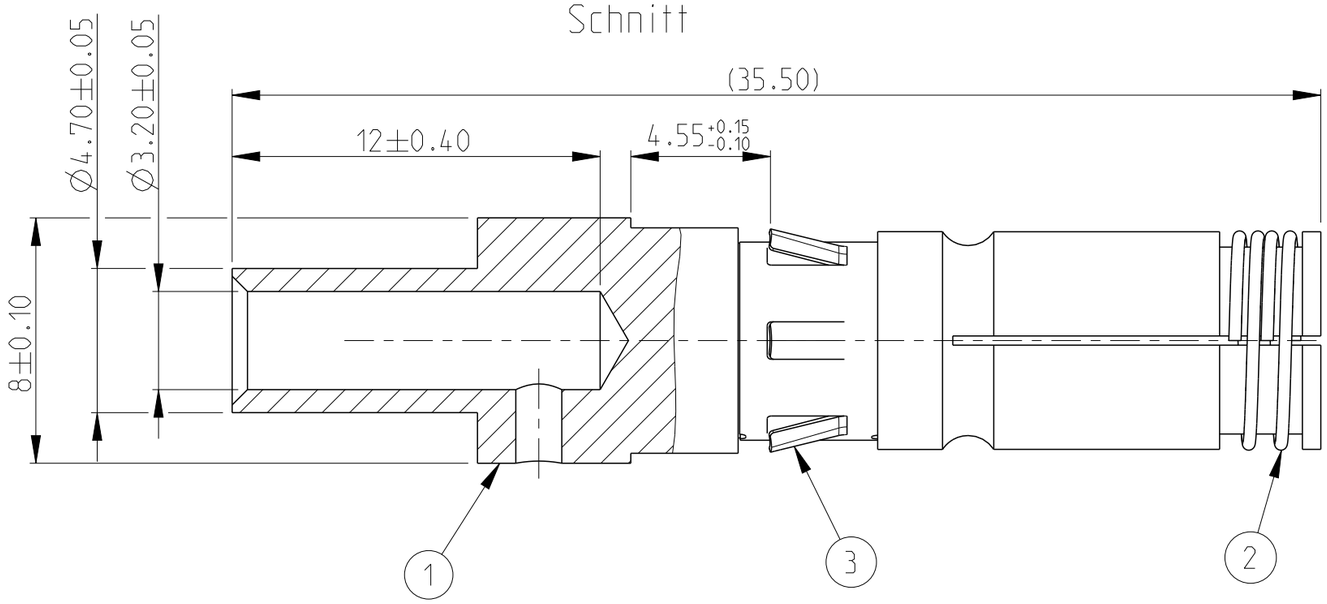

NOTES
Bemerkungen

1. BULK PACKAGING IN CORRUGATED BOX
   Lose im Beutel und Versandkarton
2. ALL SYMMETRY DIMENSION ⌯ 0.1
   Alle Symmetriemaße
3. SUITABLE PIN CONTACT SEE DRAWING: DARS24924
   Passender Stiftkontakte siehe Zeichnung: DARS24924

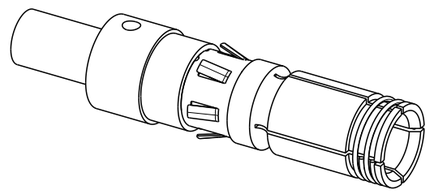

SCALE 2:1
Maßstab

	REF.	NOTE
CRIMPING TOOL Crimpzange	OUT0405-0110ASO (Daniels M317)	Position - Stellung SEE TABLE 1
LOCATOR Stellungsregler	(DANIELS TP1024)	
EXTRACTION TOOL Ausbauwerkzeug	OUTCCIEXT-E0100	

IMPORTANT: THE POSITION MAY VARY ACCORDING TO THE REAL WIRE CROSS SECTION AND COMPOSITION.

Wichtig:
Die Position kann entsprechend dem tatsächlichen Drahtdurchmesser und -aufbau variieren.

TABLE 1

WIRE SECTION Drahtsektion	Position Stellung
2,5mm² 3mm² 4mm²	3

REV	QTY Stueck	REV	PLATING Oberfläche	TE ORDER-NO. TE Bestell-Nr.	DESCRIPTION Beschreibung	ITEM NO
A	1	A	-	DARS24923-000A3	CLIP Clip	3
	2	A	-		CONTACT SPRING Kontaktfeder	2
	1	A	Ag		SOCKET BODY Sockelkörper	1

THIS DRAWING IS A CONTROLLED DOCUMENT.

DIMENSIONS: mm

TOLERANCES UNLESS OTHERWISE SPECIFIED: ACC. TO ISO 8015
0 PLC ±-
1 PLC ±-
2 PLC ±-
3 PLC ±-
4 PLC ±-
ANGLES ±0.5°

MATERIAL: SEE TABLE / Siehe Tabelle
FINISH: SEE TABLE

DWN CHANDRASHEKAR.S 06JUL2016
CHK C.FINZER 08JUL2016
APVD C.EBERWEIN 08JUL2016
PRODUCT SPEC –
APPLICATION SPEC –
WEIGHT 7.8 g

TE Connectivity

NAME
SOCKET CONTACT 2.5 TO 4 SQMM, CAR CONNECTOR
Buchsenkontakt 2.5 to 4 SQMM

SIZE	CAGE CODE	DRAWING NO	RESTRICTED TO
A3	-	C-DARS24923-000A3	

CUSTOMER DRAWING | SCALE 5:1 | SHEET 1 OF 1 | REV A1