DRAWING NUMBER
605911-970L-ENV

A3

BS 308
THIRD ANGLE PROJECTION

IF IN DOUBT, ASK

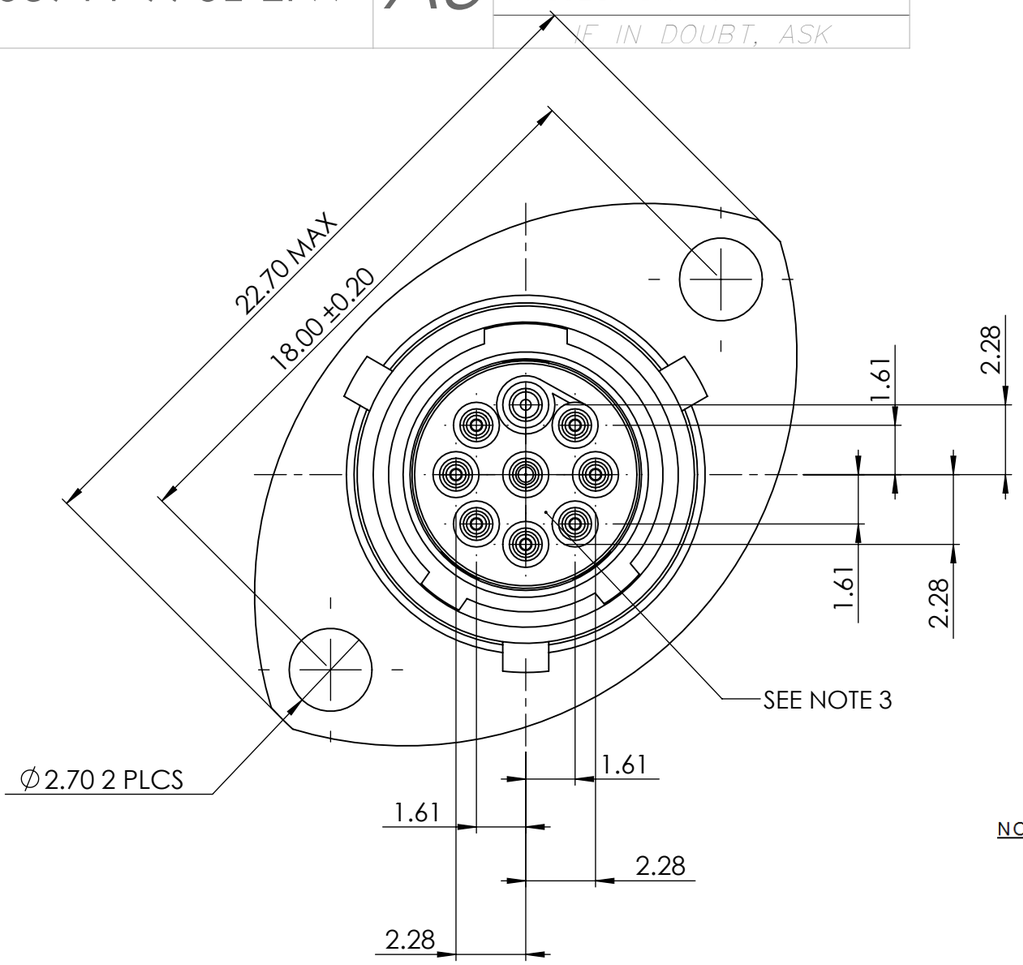

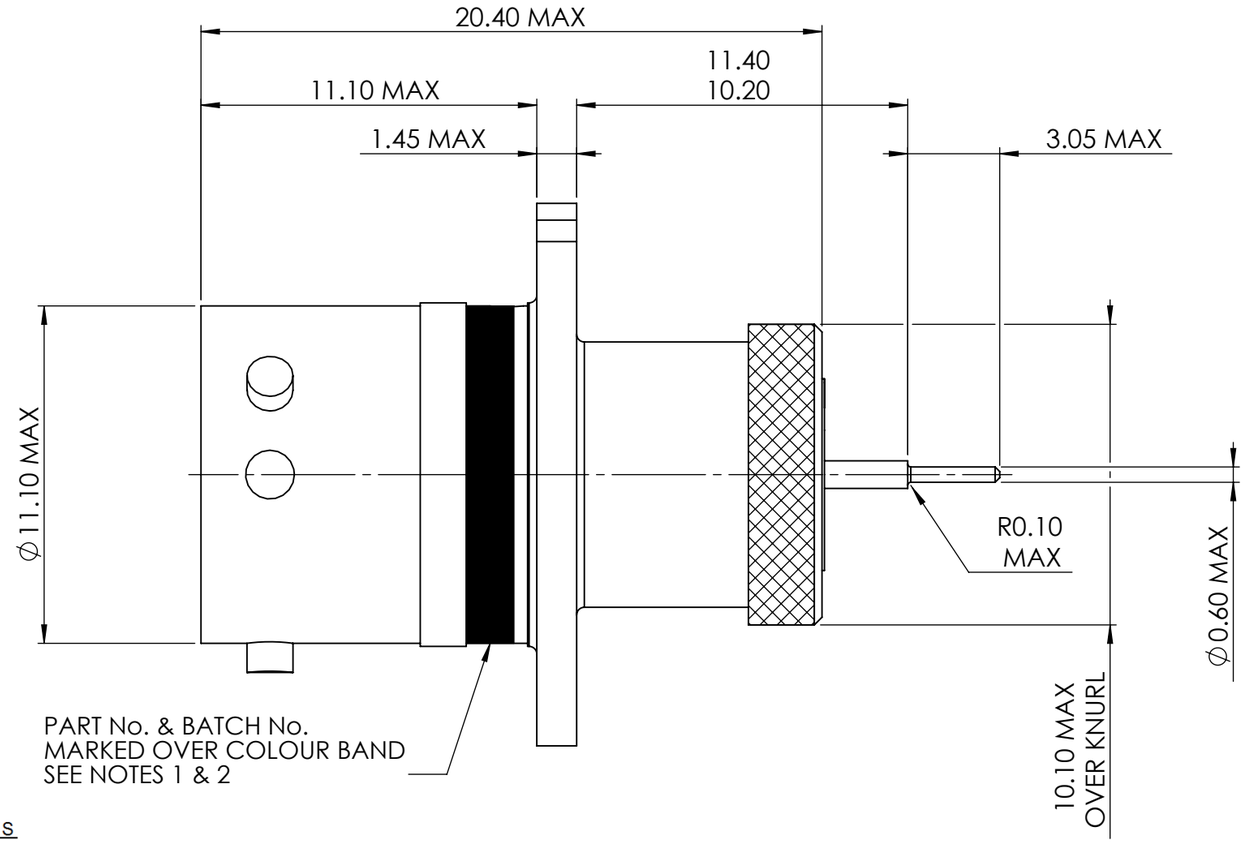

NOTES

1. CONNECTOR ORIENTATION IDENTIFIED BY COLOUR BAND COLOUR APPLIED. AS BELOW.
   N ORIENTATION – RED
   A ORIENTATION – YELLOW
   B ORIENTATION – BLUE
   C ORIENTATION – ORANGE
   D ORIENTATION – GREEN
   E ORIENTATION – GREY

2. PART NUMBER & BATCH NUMBER EXAMPLE :-

DEUTSCH ASDD206-09P/SN-HE-970L RP654321

- SERIES PREFIX
- STYLE (2 HOLE MOUNT PCB)
- SHELL SIZE
- CONTACT ARRANGEMENT
- CONTACT TYPE
  P = PIN
  S = SOCKET
- ORIENTATION
- HARSH ENVIRONMENT
- MOD CODE
- BATCH NUMBER

3. VIEW SHOWN IS PIN VERSION. CAVITY IDENTIFICATION FOR SOCKET VERSION RUNS IN OPPOSITE DIRECTION (i.e. ANTI-CLOCKWISE)

ISSUE	CHANGE NOTE	DRAWN	CHECKED	APP. ENG.	APP. B.U.	DATE
C	59005	NDL	KJF	KJF	IKG	25/08/10
B	52180	NDL	JAK	KJF	MM	24/03/06
A	51864	NDL	JAK	IKG	DRW	22/12/05

MATERIAL

HEAT TREATMENT & FINISH

PACKAGING

APP. I.E.D.

© THE COPYRIGHT OF THIS DRAWING IS RESERVED BY DEUTSCH LTD. IT IS ISSUED ON CONDITION THAT IT IS NOT COPIED, REPRODUCED OR DISCLOSED TO A THIRD PARTY EITHER WHOLLY OR IN PART WITHOUT THE CONSENT IN WRITING OF DEUTSCH LTD.

SCALE 5:1

GENERAL TOLERANCES UNLESS OTHERWISE STATED.
±0.4mm ON WHOLE NUMBERS
±0.2mm ON ONE PLACE DECIMALS
±0.1mm ON TWO PLACE DECIMALS
±1/2° ON ANGLES
±0.05mm ON DRILLED HOLES
ALL DIAMETERS ⌀0.10
REMOVE ALL BURRS AND SHARP EDGES 0.1 MAX. UNLESS OTHERWISE STATED.
DIMENSIONS IN MILLIMETRES UNLESS OTHERWISE STATED

DEUTSCH
A STEP AHEAD IN TECHNOLOGY LTD
ST LEONARDS ON SEA, EAST SUSSEX, TN38 9RF
TEL. +44 (0)1424 852721

TITLE
RECEPT ASSEMBLY ASDD2
PCB VARIANT. 970L MOD.
ENVELOPE DETAILS

DRAWING NUMBER
605911-970L-ENV