DRAWING NUMBER

454652-ENV

A3

BS 8888 THIRD ANGLE PROJECTION

IF IN DOUBT, ASK

SHEET 1 OF 3

TABLE 2	
PART No	CABLE DIA.
RSC06E-*-100	2.50
RSC06E-*-100X	2.80
RSC06E-*-180	1.80
RSC06E-*-200	2.00
RSC06E-*-300	1.70
RSC06E-*-400	3.00
RSC06E-*-500	3.20
RSC06E-*-600	2.10
RSC06E-*-700	1.60
RSC06E-*-800	3.70
RSC06E-*-900	5.00

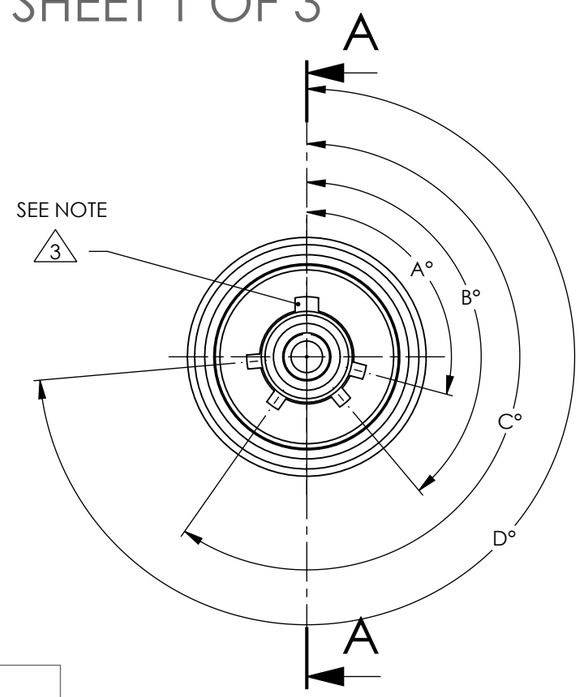

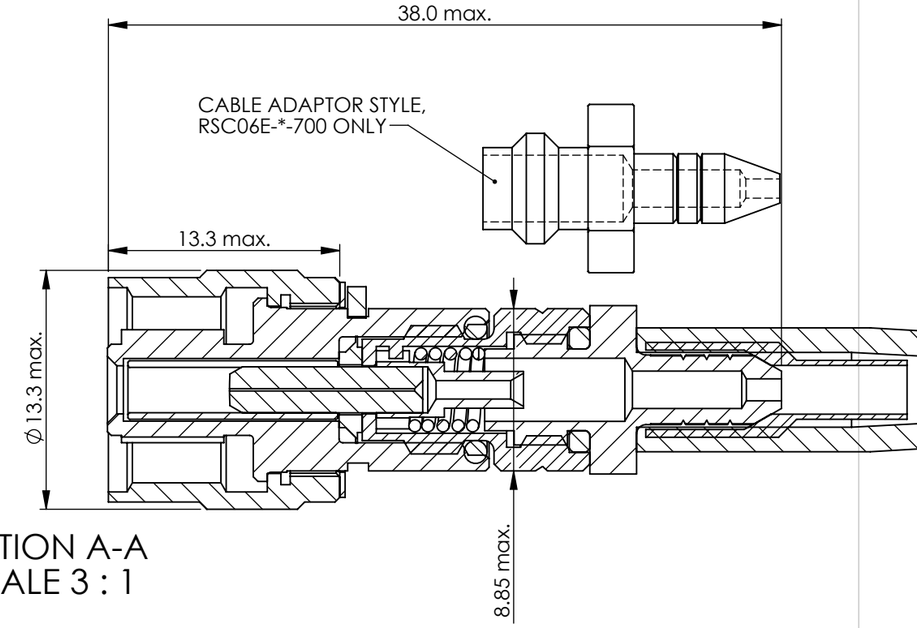

SECTION A-A
SCALE 3 : 1

TABLE 3					
PART No	KEYWAY POS'N	A°	B°	C°	D°
RSC06E-U-***	UNIVERSAL				
RSC06E-N-***	NORMAL	105	140	215	265
RSC06E-A-***	A	102	132	248	320
RSC06E-B-***	B	80	118	230	312
RSC06E-C-***	C	35	140	205	275
RSC06E-D-***	D	64	155	234	304
RSC06E-E-***	E	91	131	197	240

TABLE 1 - CABLE FITTING VARIANTS 4

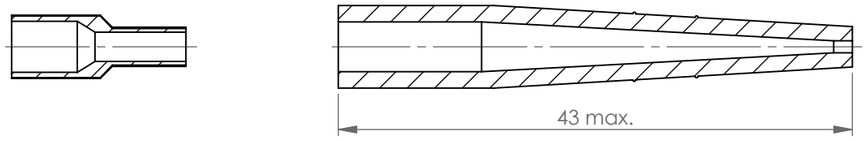

STANDARD CRIMP SLEEVE AND FLUOROSILICONE BOOT

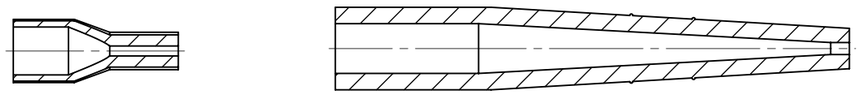

STEPPED CRIMP SLEEVE AND FLUOROSILICONE BOOT
FOR RSC06E-*-700 VARIANTS ONLY.

STRAIGHT CRIMP SLEEVE H.S. SLEEVE FOR
RSC06E-*-800 AND RSC06E-*-900 VARIANTS ONLY

NOTES:

1. DATE CODE AND PART No EXAMPLE

H9904D RSC06E-* ***

DATE CODE

SUITABLE SPACE

CONNECTOR TYPE

CABLE REF No

KEY WAY ORIENTATION
N,A,B,C,D,E,U

2. FERRULE ASSY NOT SUPPLIED WITH CONNECTOR

3 MASTER KEY ONLY FOR RSC06E-U-*** UNIVERSAL PLUG, INTERMATEABLE WITH ALL KEYWAY VARIANTS ON RSC RECEPTACLE CONNECTORS

4 SEE TABLE 1 FOR CABLE FITTING VARIANTS. STANDARD CRIMP SLEEVE AND FLUOROSILICONE BOOT SUPPLIED WITH ALL VARIANTS UNLESS OTHERWISE DETAILED

5. C.A.S. BREAKDOWN OF RSC06E-*-100 ON SHEETS 2 AND 3

ISSUE	CHANGE NOTE	DRAWN	CHECKED	APP. ENG.	APP. MARKETING	DATE
M	60343	MJH	ADH	RBC	GLB	27/06/11

MATERIAL

HEAT TREATMENT & FINISH

PACKAGING

APP. I.E.D

SCALE NTS

© THE COPYRIGHT OF THIS DRAWING IS RESERVED BY DEUTSCH UK. IT IS ISSUED ON CONDITION THAT IT IS NOT COPIED, REPRODUCED OR DISCLOSED TO A THIRD PARTY EITHER WHOLLY OR IN PART WITHOUT THE CONSENT IN WRITING OF DEUTSCH UK.

DEUTSCH
ST LEONARDS ON SEA, EAST SUSSEX, TN38 9RF
TEL. +44 (0)1424 852721

TITLE
RSC PLUG ASSEMBLY
ENVELOPE DRAWING

DRAWING NUMBER
454652-ENV

DRAWING NUMBER

454652-ENV

A3 BS 8888 THIRD ANGLE PROJECTION

IF IN DOUBT, ASK

Title:	Material Declaration for RSC06E-*-100 (* = N,A,B,C,D,E)
Part:	RSC06E-*-100
Description	RSC Plug assembly to suit cable diameter 2.50mm

DEUTSCH

Part Description	Material	Specification	Material breakdown	CAS number	Mass per assembly	%Mass per connector weight
Plug Shell	Arcap AP1D	UNS C79350	Copper	7440-50-8	0.00302	18.912
			Nickel	7440-02-0	0.00124	7.751
			Zinc	7440-66-6	0.00057	3.565
			Lead	7439-92-1	0.00005	0.295
			Manganese	7439-96-5	0.00008	0.481
			Total		**0.00495**	**31.003**
Coupling Ring	Arcap AP1D	UNS C79350	Copper	7440-50-8	0.00268	16.793
			Nickel	7440-02-0	0.00110	6.883
			Zinc	7440-66-6	0.00051	3.166
			Lead	7439-92-1	0.00004	0.262
			Manganese	7439-96-5	0.00007	0.427
			Total		**0.00440**	**27.530**
Washer	Arcap AP1D	UNS C79350	Copper	7440-50-8	0.00007	0.411
			Nickel	7440-02-0	0.00003	0.168
			Zinc	7440-66-6	0.00001	0.077
			Lead	7439-92-1	0.00000	0.006
			Manganese	7439-96-5	0.00000	0.010
			Total		**0.00011**	**0.673**
Plug Inner	Arcap AP1D	UNS C79350	Copper	7440-50-8	0.00007	0.435
			Nickel	7440-02-0	0.00003	0.178
			Zinc	7440-66-6	0.00001	0.082
			Lead	7439-92-1	0.00000	0.007
			Manganese	7440-44-0	0.00000	0.011
			Total		**0.00011**	**0.713**
Plug Ferrule	Arcap AP1D	UNS C79350	Copper	7440-50-8	0.00136	8.516
			Nickel	7440-02-0	0.00056	3.490
			Zinc	7440-66-6	0.00026	1.605
			Lead	7439-92-1	0.00002	0.133
			Manganese	7439-96-5	0.00003	0.216
			Total		**0.00223**	**13.960**
Cable adaptor Wide	Arcap AP1D	UNS C79350	Copper	7440-50-8	0.00127	7.932
			Nickel	7440-02-0	0.00052	3.251
			Zinc	7440-66-6	0.00024	1.495
			Lead	7439-92-1	0.00002	0.124
			Manganese	7439-96-5	0.00003	0.202
			Total		**0.00208**	**13.004**
Crimp Sleeve	Arcap AP1D	UNS C79350	Copper	7440-50-8	0.00040	2.526
			Nickel	7440-02-0	0.00017	1.035
			Zinc	7440-66-6	0.00008	0.476
			Lead	7439-92-1	0.00001	0.039
			Manganese	7439-96-5	0.00001	0.064
			Total		**0.00066**	**4.140**
Clicker Ball X2	Stainless Steel	AISI 316	Carbon	7440-44-0	0.00000	0.000
			Manganese	7439-96-5	0.00000	0.004
			Silicon	7440-21-3	0.00000	0.002
			Chromium	7440-47-3	0.00001	0.034
			Nickel	7440-02-0	0.00000	0.024
			Molybdenum	7439-98-7	0.00000	0.005
			Phosphorus	7723-14-0	0.00000	0.000
			Sulphur	7704-34-9	0.00000	0.000
			Nitrogen	93037-13-9	0.00000	0.000
			Iron	7439-89-6	0.00002	0.132
			Total		**0.00003**	**0.202**

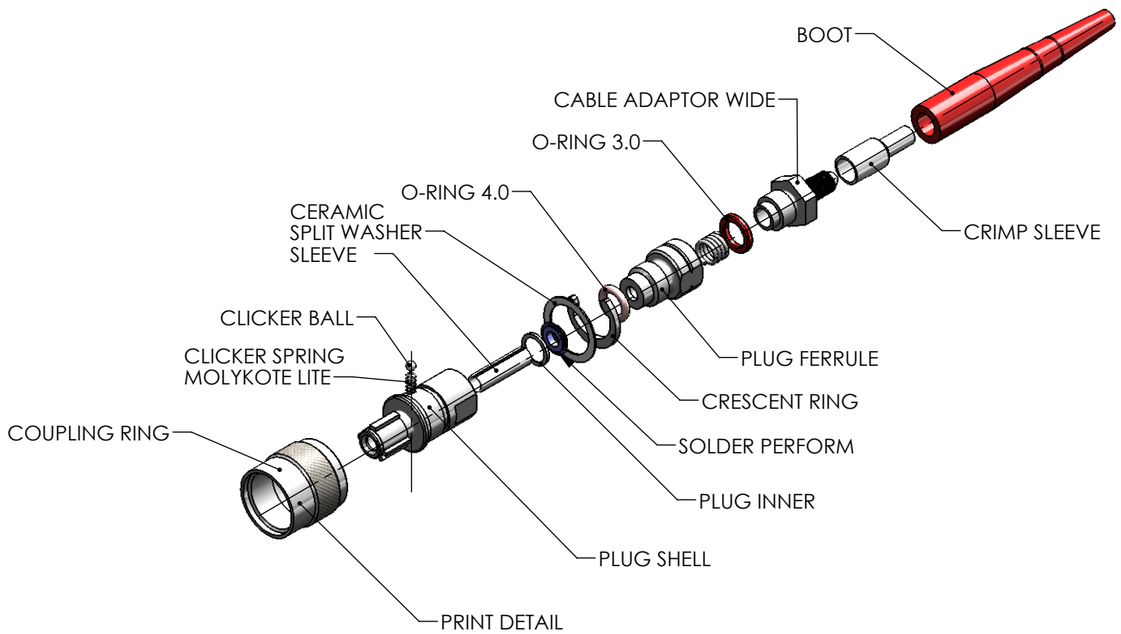

MATERIAL	
HEAT TREATMENT & FINISH	
PACKAGING	
APP. I.E.D	
SCALE	NTS

© THE COPYRIGHT OF THIS DRAWING IS RESERVED BY DEUTSCH UK. IT IS ISSUED ON CONDITION THAT IT IS NOT COPIED, REPRODUCED OR DISCLOSED TO A THIRD PARTY EITHER WHOLLY OR IN PART WITHOUT THE CONSENT IN WRITING OF DEUTSCH UK.

DEUTSCH
ST LEONARDS ON SEA, EAST SUSSEX, TN38 9RF
TEL. +44 (0)1424 852721

TITLE

RSC PLUG ASSEMBLY

ENVELOPE DRAWING

DRAWING NUMBER

454652-ENV

DRAWING NUMBER

454652-ENV

A3 BS 8888 THIRD ANGLE PROJECTION

IF IN DOUBT, ASK

SHEET 3 OF 3

Title:	C.A.S. BREAK DOWN FOR RSC06E-*-100
Part:	RSC06E-*-100 (*= N,A,B,C,D,E)
Description:	RSC Plug assembly to suit cable diameter 2.50mm

Part Description	Material	Specification	Material breakdown	CAS number	Mass per assembly	%Mass per connector weight
Clicker Spring X2	Stainless Steel	AISI 316	Carbon	7440-44-0	0.000000	0.000
			Manganese	7439-96-5	0.000000	0.000
			Silicon	7440-21-3	0.000000	0.000
			Chromium	7440-47-3	0.000000	0.001
			Nickel	7440-02-0	0.000000	0.001
			Molybdenum	7439-98-7	0.000000	0.000
			Phosphorus	7723-14-0	0.000000	0.000
			Sulphur	7704-34-9	0.000000	0.000
			Nitrogen	93037-13-9	0.000000	0.000
			Iron	7439-89-6	0.000001	0.004
			Total		**0.000001**	**0.005**
Ceramic split sleeve	Zirconia	Microlap	Zirconia	1314-23-4	0.000200	1.252
			yttrium oxide	1314-36-9	0.000006	0.039
			Total		**0.000206**	**1.291**
Boot	Fluorosilicone	ASTM1418	Fluorosilicone	2374-14-3	0.001100	
			Trade Secret			
			Total		**0.001100**	**6.890**
Ferrule Spring	Stainless steel 302	AMS5688	Carbon	7440-44-0	0.000000	0.000
			Chromium	7440-47-3	0.000003	0.019
			Iron	7439-89-6	0.000012	0.075
			Manganese	7439-96-5	0.000000	0.002
			Nickel	7440-02-0	0.000002	0.010
			Phosphorus	7723-14-0	0.000000	0.000
			Silicon	7440-21-3	0.000000	0.001
			Sulphur	7704-34-9	0.000000	0.000
			Total		**0.000017**	**0.108**
O-RING 3.0X1.5	HD37/12 Elastomer		FSE2620U	-	0.000024	0.148
			Red Iron Oxide	1309-37-1	0.000001	0.006
			HA2	-	0.000000	0.002
			Dicup 40C	80-43-3	0.000000	0.001
			Total		**0.000025**	**0.156**
O RING 4.0X1.25	HD37/12 Elastomer		FSE2620U	-	0.000020	0.128
			Red Iron Oxide	1309-37-1	0.000001	0.005
			HA2	-	0.000000	0.001
			Dicup 40C	80-43-3	0.000000	0.001
			Total		**0.000022**	**0.136**
Solder Preform	63SN/37PB	IPC-J-STD-006	Tin	7440-31-5	0.000012	0.077
			Lead	7439-92-1	0.000007	0.045
			Total		**0.000020**	**0.122**
Print Detail	Markem Ink		CARBON BLACK	1333-86-4	0.000000	0.000
			CASTOR OIL, HYDRGENATED	8001-78-3	0.000000	0.000
			FORMALDEHYDE	50-00-0	0.000000	0.000
			TRADE SECRET	TS0000-11-6	0.000000	0.000
			CYCLOHEXENE -, 2- DICARBOXYLIC ANHYDRIDE	85-42-7	0.000000	0.000
			N-BUTYL ALOCOHOL	71-36-3	0.000000	0.000
			TRIBUTYL PHOSPHATE	126-73-8	0.000000	0.000
			2-METHYL-1-PROPANOL	78-83-1	0.000000	0.000
			BALANCE, SPECIFIED AS UNHAZARDOUS MATERIALS	-	0.002000	0.002
			Total		**0.000000**	**0.002**
Grease	Molykote		Phenyl-methyl silicone	63148-58-3		
			Total		**0.000010**	**0.064**
TOTAL					0.015966	
			MASS IN GRAMS		**15.966168**	100.000

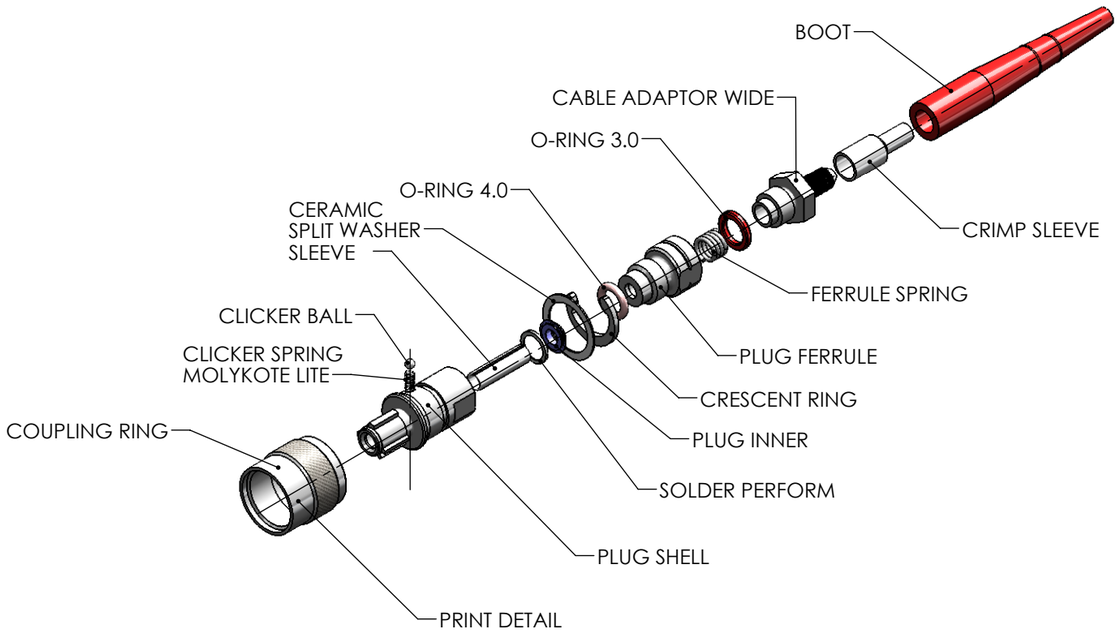

MATERIAL	© THE COPYRIGHT OF THIS DRAWING IS RESERVED BY DEUTSCH UK. IT IS ISSUED ON CONDITION THAT IT IS NOT COPIED, REPRODUCED OR DISCLOSED TO A THIRD PARTY EITHER WHOLLY OR IN PART WITHOUT THE CONSENT IN WRITING OF DEUTSCH UK.	DEUTSCH
HEAT TREATMENT & FINISH		ST LEONARDS ON SEA, EAST SUSSEX, TN38 9RF TEL. +44 (0)1424 852721
PACKAGING	TITLE: RSC PLUG ASSEMBLY ENVELOPE DRAWING	DRAWING NUMBER: 454652-ENV
APP. I.E.D		
SCALE: NTS		