CUSTOMER DRAWING

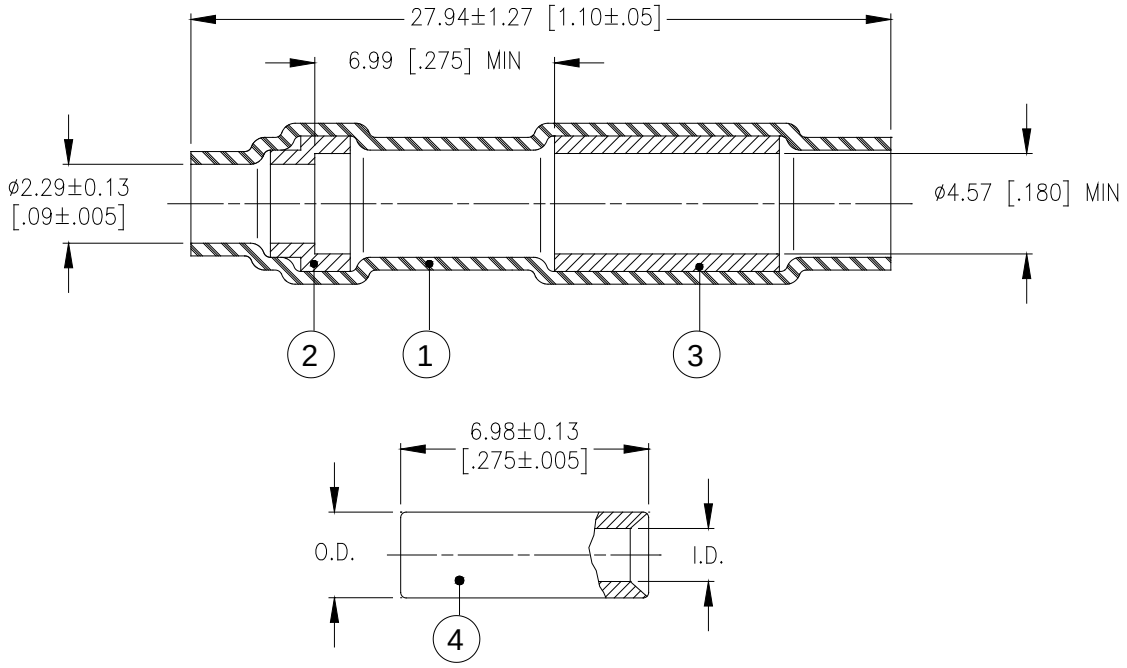

Dimensions of Sub Splicer				I.D.		O.D.	
Product Name	Color Code	Max. Weight	CMA Range	MIN	MAX	MIN	MAX
D-436-58-UP	N/A	1.4 lbs/Mpcs	779 - 2680	1.63 (.064)	1.75 (.069)	2.57 (.101)	2.69 (.106)
D-436-59-UP	N/A	1.8 lbs/Mpcs	1900 - 6755	2.46 (.097)	2.59 (.102)	3.73 (.147)	3.89 (.153)

MATERIALS

① INSULATION SLEEVE: Heat-shrinkable, radiation cross-linked modified polyvinylidene fluoride. Transparent blue.
② MELTABLE SEALING INSERT: Modified, immersion resistant thermoplastic. Color: natural.
③ MELTABLE SEALING INSERT: Modified, immersion resistant thermoplastic. Color: natural.
④ SEAMLESS STUB SPLICER:
Base Metal: Copper alloy 101 or 102 per WW-T-775.
Plating: Un-plated.

APPLICATION

- These parts are designed to provide an immersion resistant 2 wire stub splice, or a 2 to 1 parallel splice, made with having insulations rated for 135°C minimum.
- Recovered dimensions of insulation sleeve (Item1): I.D.: 2.41 (.095) Maximum, Wall: 0.33 (.013) Minimum.
- For installation procedures refer to TE Connectivity's "Miniseal D-436 Series Sealed Crimp Splice Products Installation Guidelines."

TE Connectivity			Raychem Devices	TITLE : STUB SPLICE SEALING SYSTEM, UN-PLATED		
UNLESS OTHERWISE SPECIFIED DIMENSIONS ARE IN MILLIMETERS. REFERENCE DIMENSIONS [INCHES] ARE IN BRACKETS.			DOCUMENT NO.: D-436-58/-59/-UP			
TOLERANCES: 0.00 N/A 0.0 N/A 0 N/A	ANGLES: N/A ROUGHNESS IN MICRON	TE CONNECTIVITY (TE) RESERVES THE RIGHT TO CHANGE THIS DRAWING AT ANYTIME. USERS SHOULD EVALUATE THE SUITABILITY OF THE PRODUCT FOR THEIR APPLICATION.	DATE: Nov 30, 2015		REV. A	
DRAWN BY: T. NGUYEN	CAGE CODE: 06090	REVISED PER: ECO-15-017490	PROD. REV.: SEE TABLE	SCALE: None	SIZE: A	SHEET: 1 of 1

© 2015 TE CONNECTIVITY LTD. FAMILY OF COMPANIES. ALL RIGHTS RESERVED
If this document is printed it becomes uncontrolled. Check for the latest revision.