THIS DRAWING IS UNPUBLISHED. RELEASED FOR PUBLICATION -,- .
© COPYRIGHT - TE Connectivity Ltd. ALL RIGHTS RESERVED.

REVISIONS

P	LTR	DESCRIPTION	DATE	DWN	APVD
	1	ORIGINAL		W.X.	L.K.

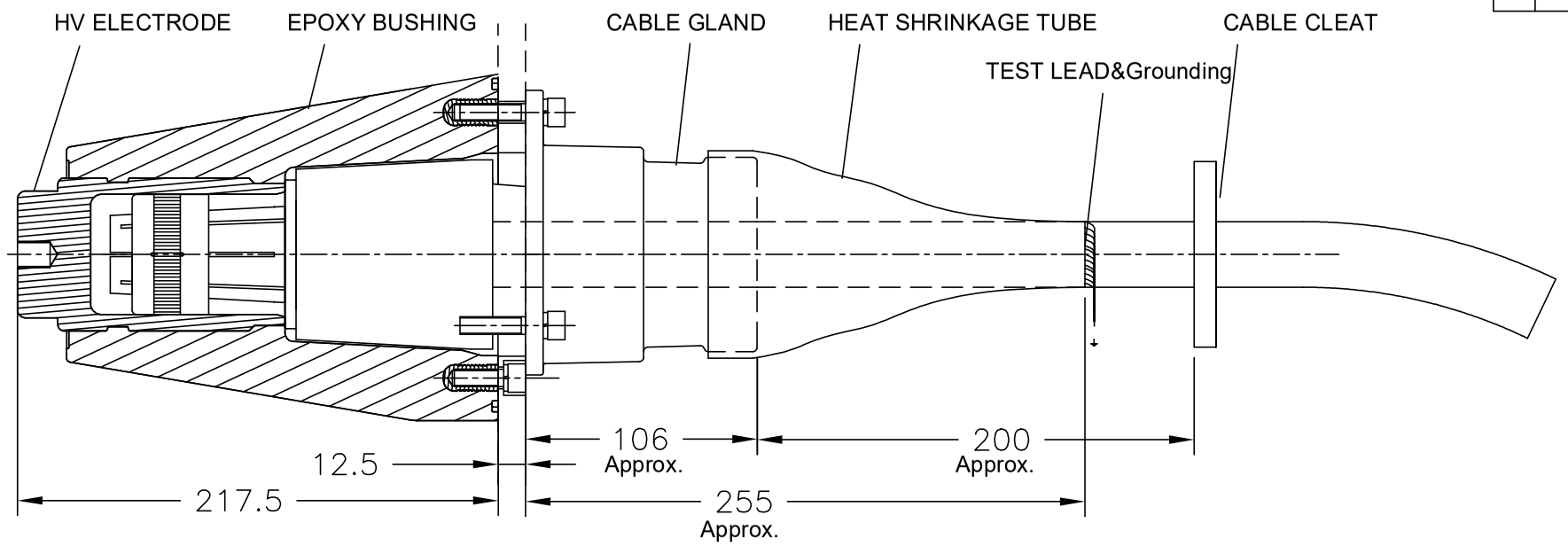

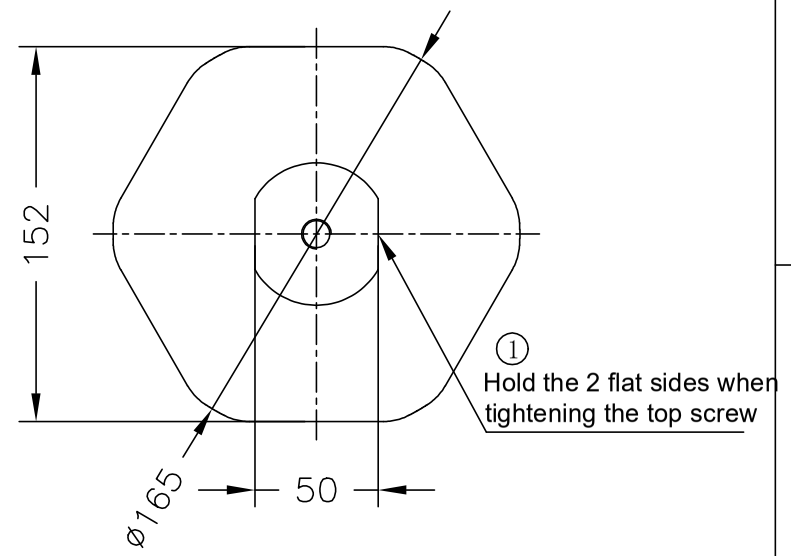

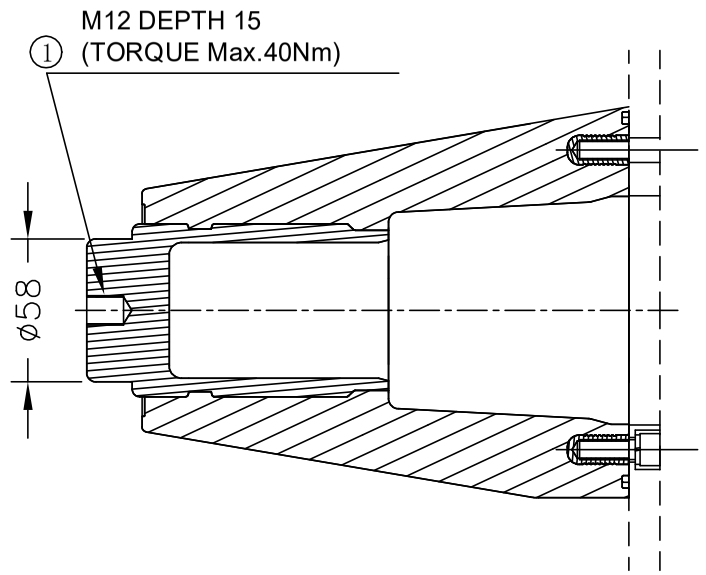

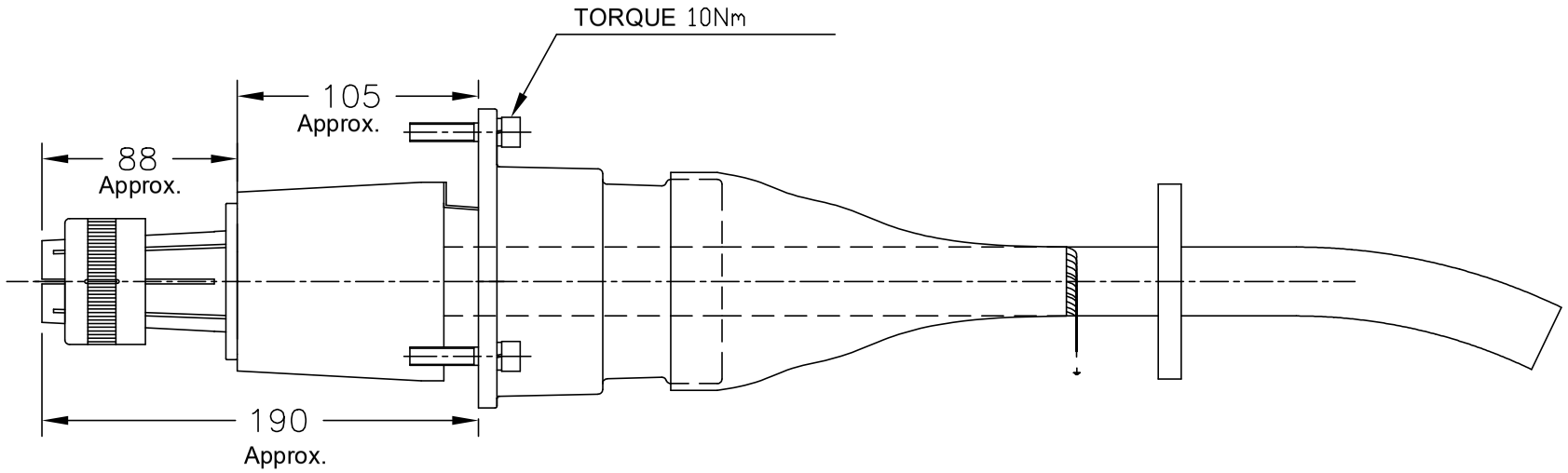

TECHNICAL DATA	
MAX. VOLTAGE Um(kV)	42
AC Withstand(kV)	117
LIGHTING IMPULSE VOLTAGE(kV)	200
MAX. INSULATION DIA. (mm)	55
THERMAL SC	35kA/5s
DYNAMIC SC	125kA
Rated current(A)	Max.1250
WEIGHT(kg)	2.5

THIS DRAWING IS A CONTROLLED DOCUMENT.

DIMENSIONS: mm

TOLERANCES UNLESS OTHERWISE SPECIFIED:
0 PLC ± -
1 PLC ± -
2 PLC ± -
3 PLC ± -
4 PLC ± -
ANGLES ± -

MATERIAL -

FINISH -

DWN WILLIAM XU
CHK JANE WU
APVD RICK YAO
PRODUCT SPEC —
APPLICATION SPEC —
WEIGHT —

TE Connectivity Ltd.

NAME RPIT INNER CONE PLUG-IN TERMINATION SIZE 3

SIZE	CAGE CODE	DRAWING NO	RESTRICTED TO
A3	00779	C-2259670	—

CUSTOMER DRAWING

SCALE	SHEET	REV
1:1	1 OF 1	1

1470-19 (1/15)