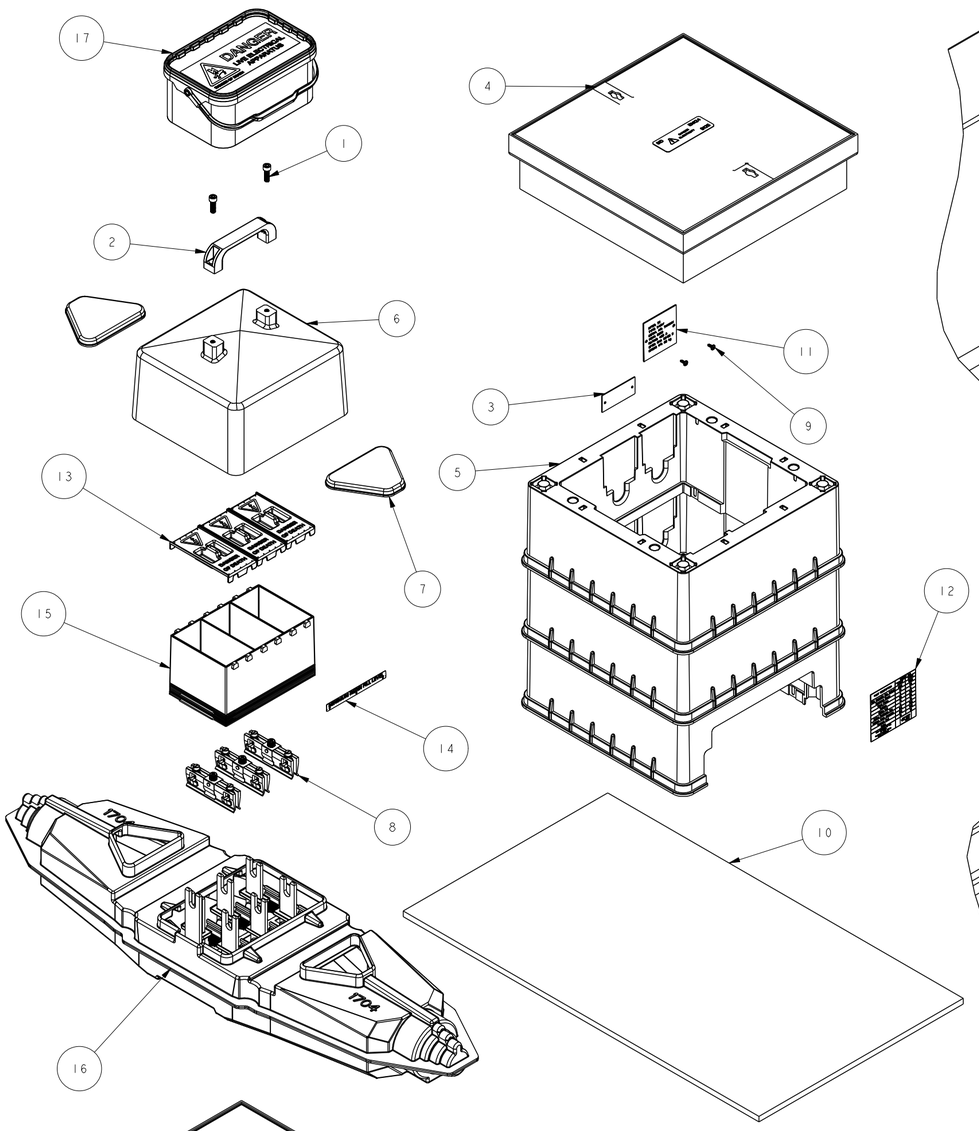

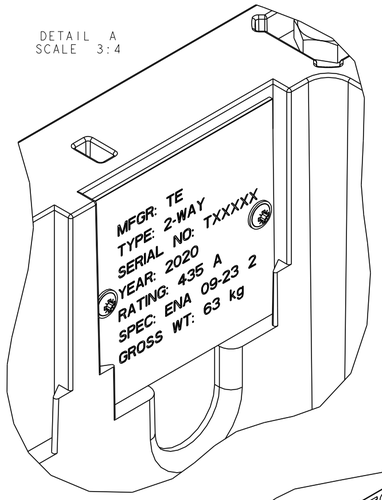

DETAIL A
SCALE 3:4

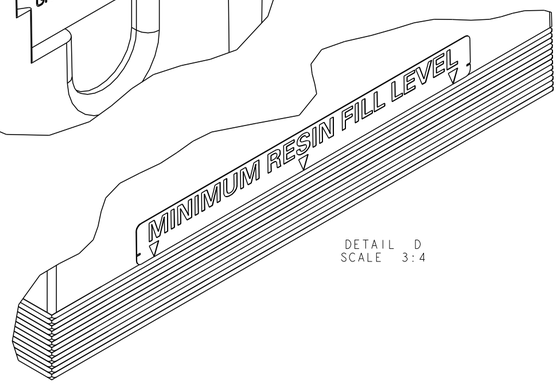

DETAIL D
SCALE 3:4

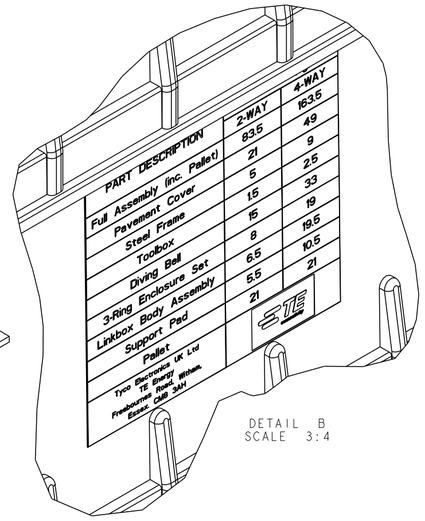

DETAIL B
SCALE 3:4

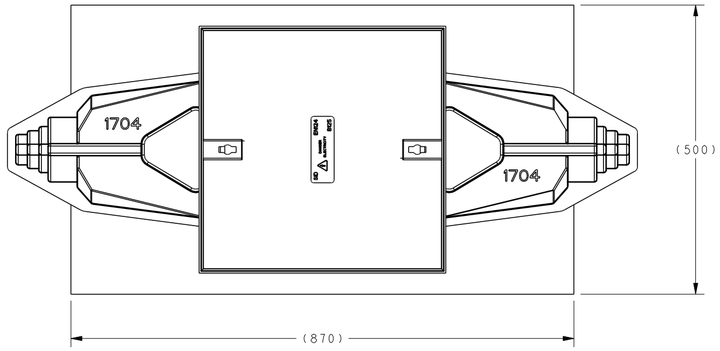

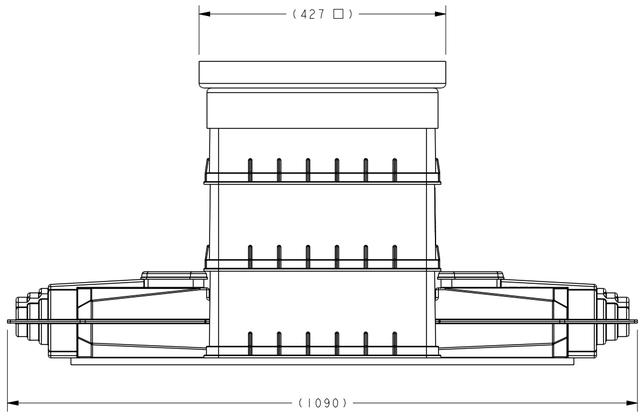

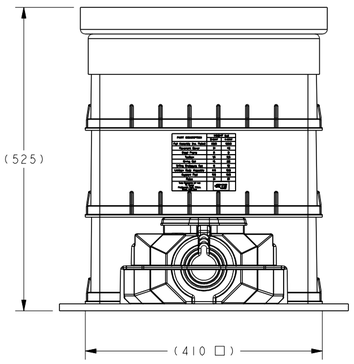

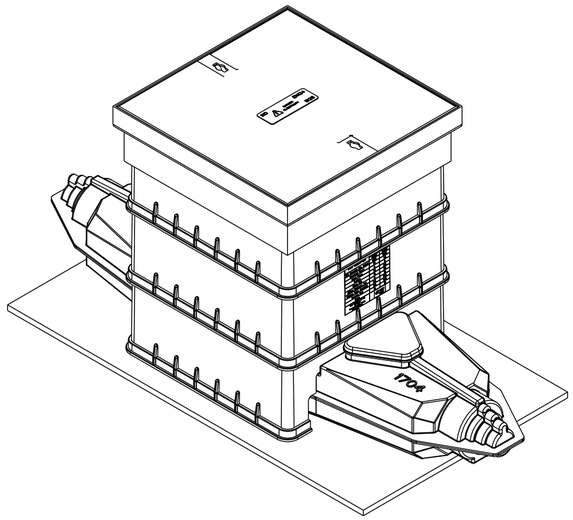

ITEM	PART/DRG NO	QTY	DESCRIPTION
1	01-703-0050	2	M8 x 25 LONG SOCKET HEAD CAP SCREW - STEEL
2	01-712-0013	1	BRIDGE HANDLE PLAIN BORE - M8 x 132 CRS
3	01-803-0016	2	ENGRAVING LABEL - WHITE/BLACK/WHITE - 80x35mm
4	01-807-0371	1	LINK BOX ENCLOSURE COVER 2-WAY (MK2 & MK3 LINKBOX)
5	01-807-0433	1	2-WAY LINK BOX ENCLOSURE SET - MK2 & MK3 LINKBOX (UR3030TMB)
6	01-811-0002	1	DIVING BELL LID 2-WAY (MK2 LINK BOX)
7	01-811-0057	2	UPPER HOUSING CUT-OUT COVER - MULTICABLE (MK2 LINK BOX)
8	02-803-0080	3	82.5mm WEDGE LINK
9	BAH-017120073	2	SELF TAPPER SCREW - No 8 x 1/2" FLANGE HEAD PZ #2 ZINC PLATED
10	BAH-018070608	1	RECYCLED LDPE 2-WAY LINKBOX BASE PAD FOR 1704 SHELL : 500mm x 870mm x 12mm THICK
11 (SEE NOTE 3)	BAH-018070638	1	ENGRAVING LAMINATE TAG 80mm x 80mm x 1.5mm - WHITE ON BLACK
12 (SEE NOTE 4)	BAH-018070641	1	MK4 LINKBOX WEIGHT LABEL FOR 2-WAY & 4-WAY
13	BAH-018110104	3	INJECTION MOULDED TERMINAL COVER LID (MK2 & MK3 LINKBOX)
14 (SEE NOTE 1)	BAH-018110194	2	LABEL - YELLOW / BLACK - 145 x 15 x 0.06mm 'MINIMUM RESIN FILL LEVEL'
15 (SEE NOTE 2)	BAH-018110256	1	UNIVERSAL PHASE HOUSING FOR LINKBOX
16	BAH-028110278	1	2-WAY 4-CORE ENHANCED UNTAILED LINKBOX BODY BUILD - MK4
17	BAH-038110285	1	2-WAY 4-CORE ENHANCED LINKBOX INSTALLATION TOOLBOX KIT - MK4 STANDARD
18	BAH-170400089	2	BLACK REFUSE SACK : 18" x 29" x 39" x 200 GAUGE

NOTES :

1. RESIN LEVEL LABELS (x2) ARE TO BE STUCK TO PHASE HOUSING AS SHOWN (DETAIL D).
2. PHASE HOUSING (x1) IS NOT TO BE PUSHED ONTO TERMINAL SPIGOTS.
3. ENGRAVING TAG (x1) IS TO BE SCREWED TO TOP ENCLOSURE RING AS SHOWN (DETAIL A).
4. WEIGHT LABEL (x1) IS TO BE STUCK TO MIDDLE ENCLOSURE RING AS SHOWN (DETAIL B).

Revision	Description	Name/DMR	Date
C	BAH-018070640 (x1) REMOVED AND NOTE 5 REMOVED	BH-01365	03/08/20
B	BAH-018070379 (x1) REMOVED & BAH-017120073 (x2), BAH-018070638 (x1), BAH-018070640 (X1), BAH-018070641 (X1) ADDED	BH-01345	12/02/20
A	FIRST ISSUE	BH-01261	12/03/18

TE connectivity

Material: VARIES
Finish: VARIES
Tolerances (UOS): N/A
B&H Short Desc.: 1704E/3C

- IF IN DOUBT ASK - DO NOT SCALE -

Part Description: 2-WAY 3-CORE ENHANCED UNTAILED LINKBOX - MK4 STANDARD

Design/Drawn: D M EATON
Date: 12-Mar-18
Scale (UOS): 2:15
THIRD ANGLE PROJECTION
A2
TCPN: EN3413-000
Part Weight: 62.5 kg
Drawing/Part No: BAH-028110279
Drawing Type: CUSTOMER
Rev: C

REMOVE ALL BURRS AND SHARP EDGES - SURFACES TO BE FREE FROM SCRATCHES AND DEFECTS - ALL THREADS TO BS3643 PT 2

© 2020 TE CONNECTIVITY. ALL RIGHTS RESERVED.