CATALOGUE NUMBER: NAA1790-1880-S
SUITS CONDUCTOR

ARMOUR RODS

STRANDING	COND. TYPE	DIAMETER	FITTING LAY
19/3.75	AAC/AAAC	18.80	RIGHT HAND
30/7/0.102	ASCR	18.14	RIGHT HAND

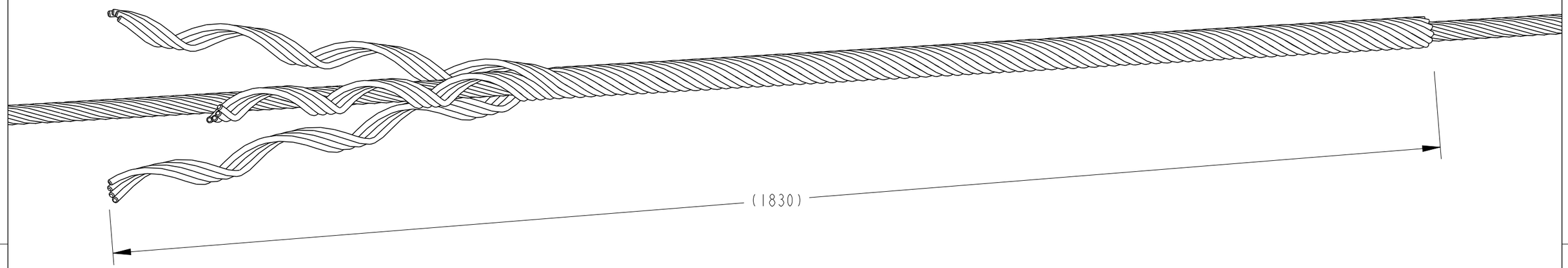

BOX LABEL

P/N: NAA1790-1880-S
ID:
DESCRIPTION:
NON-TENSION ALUMINIUM ARMOUR RODS (NAA) FITTING SUBSET
19/3.75 AAC/AAAC
30/7/0.102 ACSR
RANGE: 17.90 - 18.80
COLOUR-CODE: BLACK
QTY: 10 WEIGHT: ----- BATCH: ------

PRODUCT LABEL

NAA1790-1880-S
19/3.75 AAC/AAAC
30/7/0.102 ACSR
WEIGHT: 1.40g
BATCH NO: ----------
MONTH/YEAR: ----------

TECHNICAL SPECIFICATIONS;

CATALOGUE NUMBER: NAA1790-1880-S
DESCRIPTION: NON-TENSION ALUMINIUM ARMOUR RODS (NAA) FITTING SUBSET
MATERIAL: ALUMINIUM ALLOY
ROD DIAMETER: 5.40mm
TOTAL NUMBER OF RODS: 12
NUMBER OF RODS PER SUBSET: 4 & 4 & 4
OVERAL LENGTH: 1830mm
END FINISH: BALLENDED
FITTING LAY DIRECTION: RIGHT HAND
COLOUR CODED: BLACK
RODS ARE LABELED, BUNDLED IN A SET AND TAPED AT BOTH ENDS.

POS	REV	REVISION RECORD	DATE	DWN	APVD
—	1	NEW RELEASE	30-04-2013	RN	AT

IMPLIED NOTES: BURRS AND SHARP EDGES REMOVED; SCREW THREADS ARE TO AS 1275; DO NOT WORK TO DIMS MARKED REF; SURFACE FINISH 6.3 U.N.O.; DIMS ARE IN mm. DO NOT SCALE

IMPLIED TOLERANCES: HOLE DIA AND LOCATIONS.±0.5mm.; DIMENSIONS UP TO 30mm..±1.5mm.; DIMENSIONS OVER 30mm...±5%.; UP TO A MAX OF.....±5mm.; ANGULAR DIMENSIONS.....±5°.

TCPN: -
PART Alias UTX/DUL: NAA1790-1880-S
Cat No: NAA1790-1880-S
MATERIAL DESC: ALUMINIUM ALLOY
MATERIAL NO: -
MATL SPEC/STD/DRG NO: -
PROCESS SPEC HEAT TREAT/PLATING NO:

TITLE: NON-TENSION ALUMINIUM ARMOUR RODS (NAA) FITTING SUBSET
COND.RANGE: Ø17.90-Ø18.80 19/3.75 AAC/AAAC 30/7/0.102 ACSR

DRAWN: RN | DATE: 30-04-2013 | CHECKED: MN | APPROVED: AT

TE Connectivity
2/3 Corella Close
Berkeley Vale NSW 2261 Australia

SIZE: A3 | PROJECTION: 3RD ANGLE | SCALE: NTS | DRAWING NO: NAA1790-1880-S-C | SHEET 1 OF 1 | REV 1

Format: generic_ma3_au_rl.frm
Template: tec_generic_a3_metric_au_rl.drw
Dwg No from Pt Mod Fam Tbl: >AUXXXXX

THIS DRAWING IS A CONTROLLED DOCUMENT
DRAWING NO NAA1790-1880-S-C
THIS INFORMATION IS CONFIDENTIAL AND PROPRIETARY TO TE CONNECTIVITY CORPORATION AND ITS WORLDWIDE SUBSIDIARIES AND AFFILIATES. IT MAY NOT BE DISCLOSED TO ANYONE, OTHER THAN TE CONNECTIVITY PERSONNEL, WITHOUT WRITTEN AUTHORIZATION FROM TE CONNECTIVITY CORPORATION, AUSTRALIA.