THIS DRAWING IS A CONTROLLED DOCUMENT

DRAWING NO AU34722

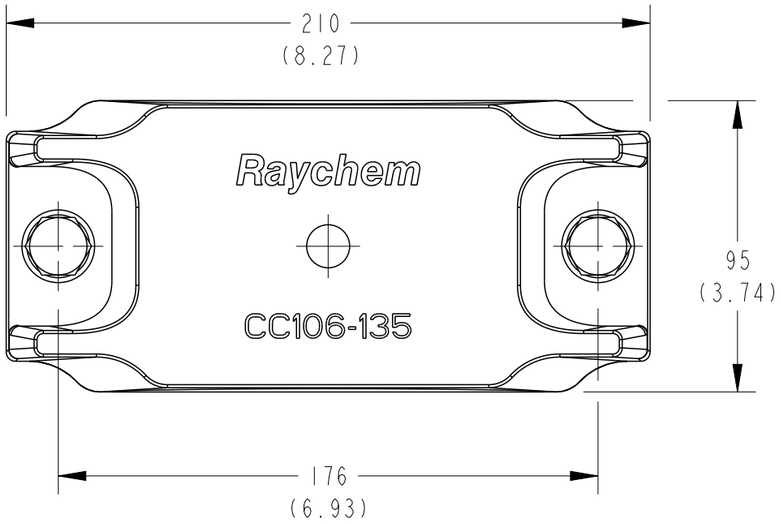

PART NO.	CATALOGUE NO.
EK1892-000	CC106-120-FM-M12
EK1894-000	CC120-135-FM-M12

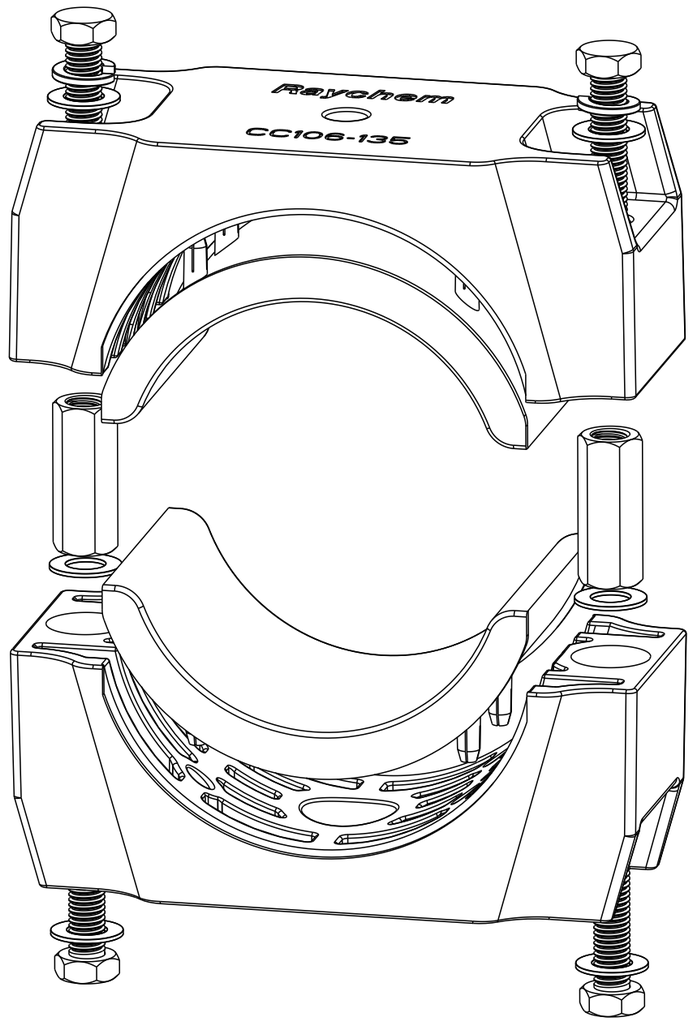

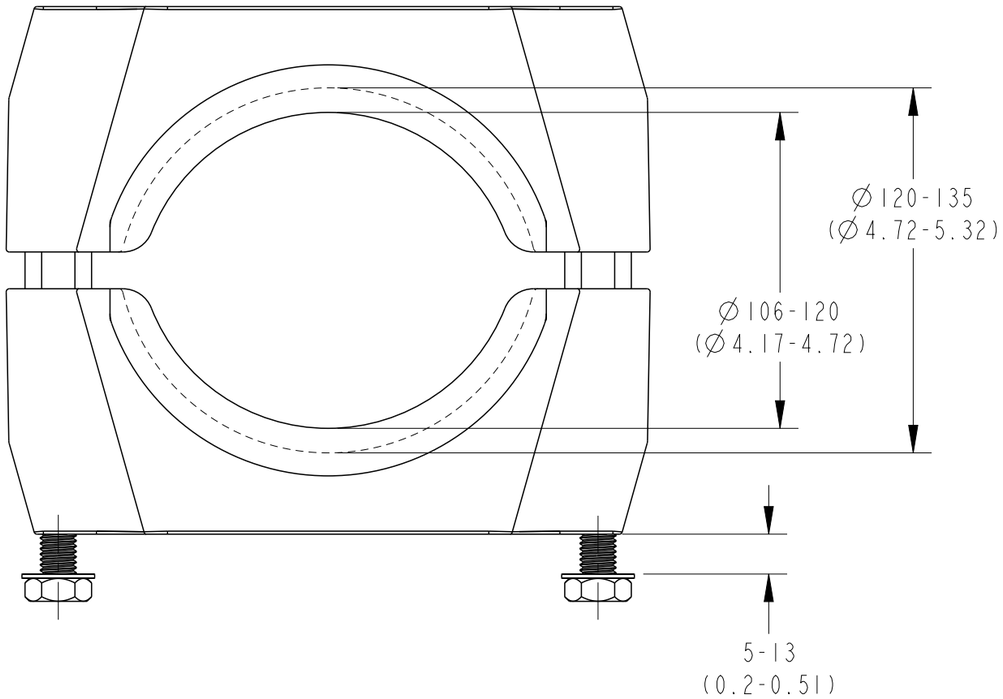

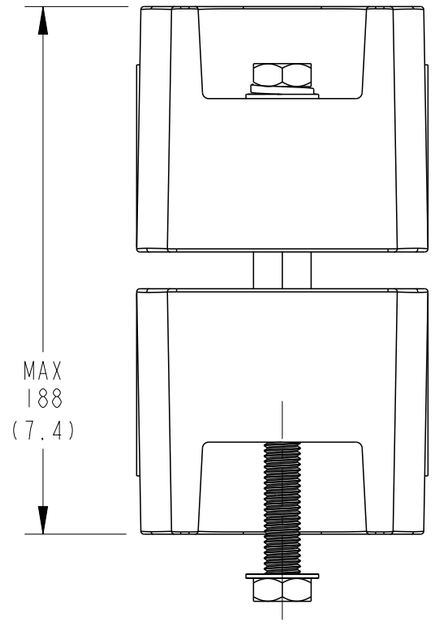

THIS INFORMATION IS CONFIDENTIAL AND PROPRIETARY TO TE CONNECTIVITY CORPORATION AND ITS WORLDWIDE SUBSIDIARIES AND AFFILIATES. IT MAY NOT BE DISCLOSED TO ANYONE, OTHER THAN TE CONNECTIVITY PERSONNEL, WITHOUT WRITTEN AUTHORIZATION FROM TE CONNECTIVITY CORPORATION, AUSTRALIA.

LOC	POS	REV	REVISION RECORD	DATE	DWN	APVD
DIST	—	1	NEW RELEASE	28-06-2016	RN	AT

IMPLIED NOTES
BURRS AND SHARP EDGES REMOVED
SCREW THREADS ARE TO AS 1275
DO NOT WORK TO DIMS MARKED REF
SURFACE FINISH 6.3 U.N.O.
DIMS ARE IN mm. DO NOT SCALE

IMPLIED TOLERANCES
HOLE DIA AND LOCATIONS..±0.5mm
DIMENSIONS UP TO 30mm...±1.5mm
DIMENSIONS OVER 30mm...±5%
UP TO A MAX OF.....±5mm
ANGULAR DIMENSIONS.....±5°

TCPN: REFER TABLE
PART Alias UTX/DUL: CC106-135-FM
Cat No: REFER TABLE

TITLE: CABLE CLEAT Ø106-120 & Ø120-135 FLAT MOUNT TYPE M12

DRAWN: RN | DATE: 28-06-2016
CHECKED: DG | APPROVED: AT

TE Connectivity
2/3 Corella Close
Berkeley Vale NSW 2261 Australia

MATERIAL DESC: -
MATERIAL NO: - | MATL SPEC/STD/DRG NO: - | PROCESS SPEC HEAT TREAT/PLATING NO:

SIZE: A3 | PROJECTION: 3RD ANGLE | SCALE: 1:2 | DRAWING NO: AU34722 | SHEET 1 OF 1 | REV 1

Format: generic_ma3_au_r1.frm
Template: tec_generic_a3_metric_au_r1.drw
Dwg No from Pt Mod Fam Tbl: AU34722