THIS DRAWING IS A CONTROLLED DOCUMENT
DRAWING NO AU34527

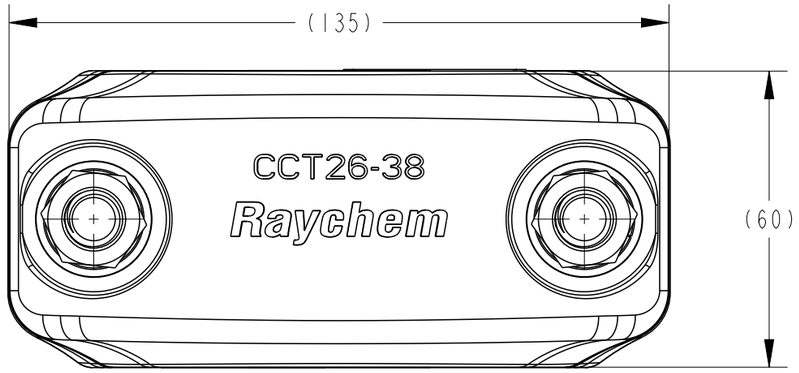

PART NO.	CATALOGUE NO.
BM4864-000	CCT26-38-SN-MI2

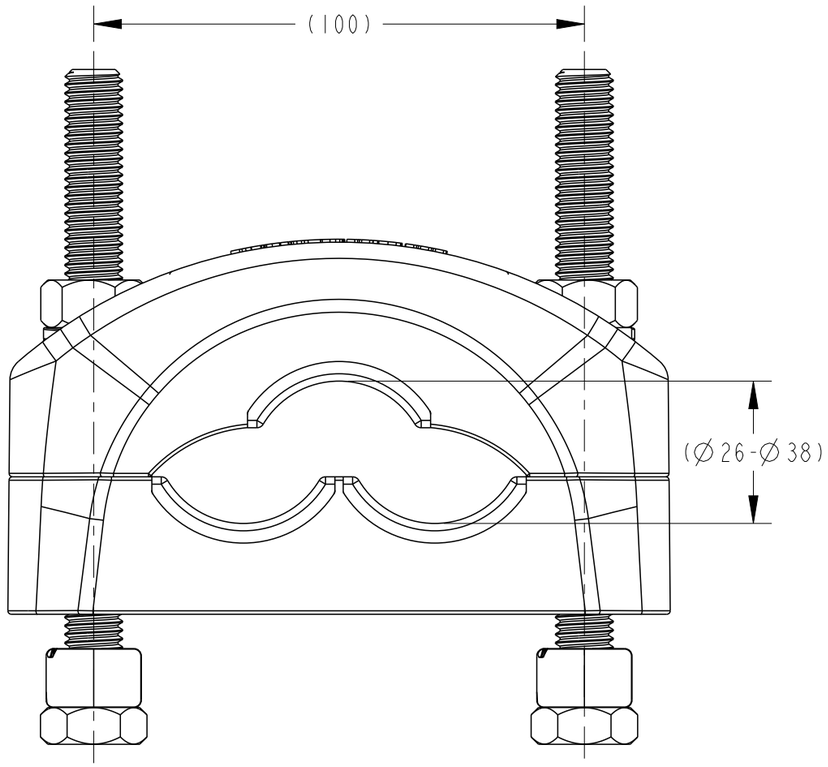

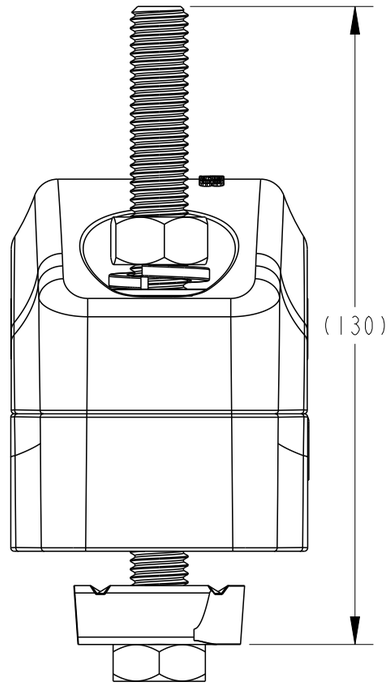

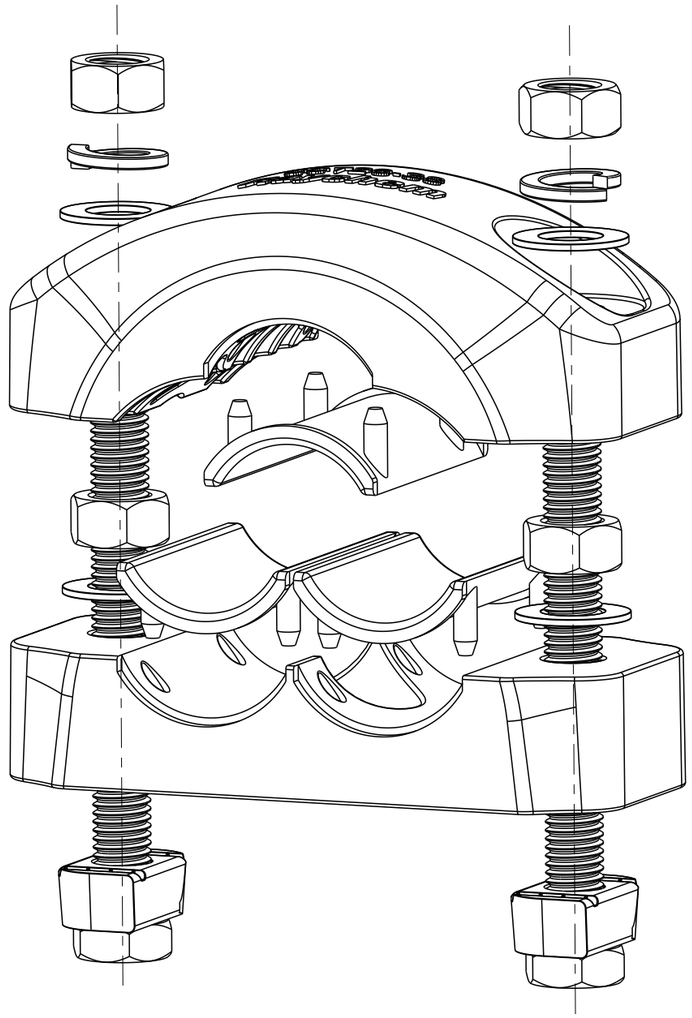

THIS INFORMATION IS CONFIDENTIAL AND PROPRIETARY TO TE CONNECTIVITY CORPORATION AND ITS WORLDWIDE SUBSIDIARIES AND AFFILIATES. IT MAY NOT BE DISCLOSED TO ANYONE, OTHER THAN TE CONNECTIVITY PERSONNEL, WITHOUT WRITTEN AUTHORIZATION FROM TE CONNECTIVITY CORPORATION, AUSTRALIA.

POS	REV	REVISION RECORD	DATE	DWN	APVD
—	1	NEW RELEASE	13/01/15	DG	AT

LOC

DIST

IMPLIED NOTES
BURRS AND SHARP EDGES REMOVED
SCREW THREADS ARE TO AS 1275
DO NOT WORK TO DIMS MARKED REF
SURFACE FINISH 6.3 U.N.O.
DIMS ARE IN mm. DO NOT SCALE

IMPLIED TOLERANCES
HOLE DIA AND LOCATIONS..±0.5mm.
DIMENSIONS UP TO 30mm...±1.5mm.
DIMENSIONS OVER 30mm...±5%.
UP TO A MAX OF.....±5mm.
ANGULAR DIMENSIONS.....±5°.

TCPN BM4864-000
PART Alias UTX/DUL CCT26-38-SN-MI2
Cat No CCT26-38-SN-MI2

MATERIAL DESC
MATERIAL NO
MATL SPEC/STD/DRG NO
PROCESS SPEC HEAT TREAT/PLATING NO

TITLE
CABLE CLEAT TREFOIL Ø26-Ø38
STRUT NUT MI2

DRAWN DG
DATE 13/01/15
CHECKED RN
APPROVED AT

TE Connectivity
2/3 Corella Close
Berkeley Vale NSW 2261 Australia

SIZE A3
PROJECTION 3RD ANGLE
SCALE 4:5
DRAWING NO AU34527
SHEET 1 OF 1
REV 1