PART NO.	CATALOGUE NO.
EF8407-000	CC80-92-PL-M12
EF8409-000	CC92-106-PL-M12

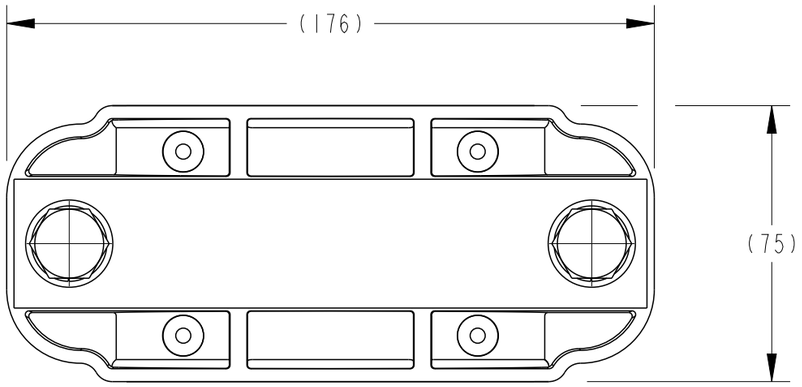

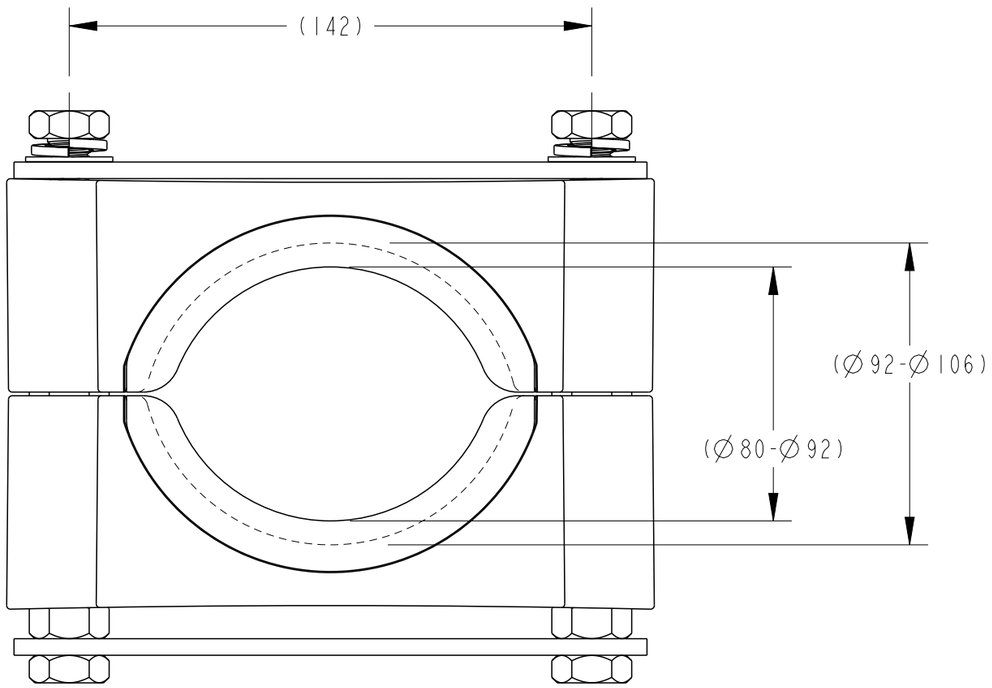

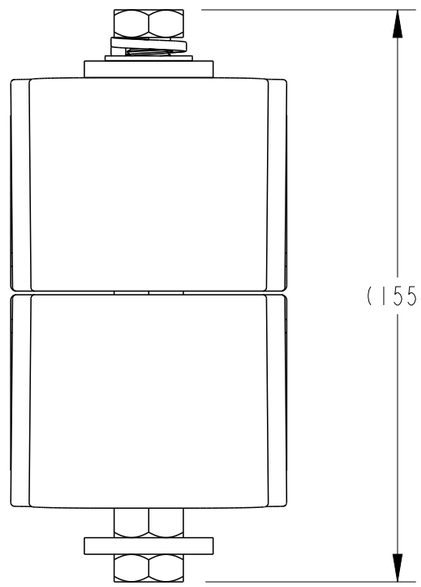

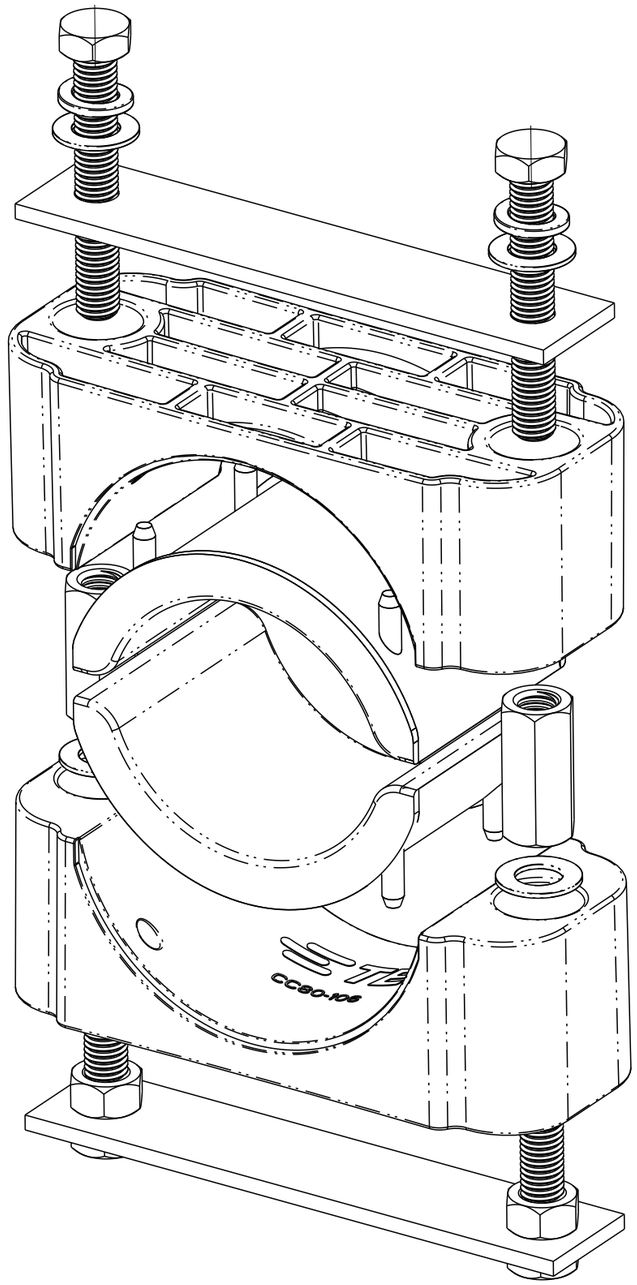

POS	REV	REVISION RECORD	DATE	DWN	APVD
—	1	NEW RELEASE	14-07-2014	RN	AT

LOC

DIST

IMPLIED NOTES
BURRS AND SHARP EDGES REMOVED
SCREW THREADS ARE TO AS 1275
DO NOT WORK TO DIMS MARKED REF
SURFACE FINISH 6.3 U.N.O.
DIMS ARE IN mm. DO NOT SCALE

IMPLIED TOLERANCES
HOLE DIA AND LOCATIONS..±0.5mm
DIMENSIONS UP TO 30mm...±1.5mm
DIMENSIONS OVER 30mm...±5%
UP TO A MAX OF.....±5mm
ANGULAR DIMENSIONS.....±5°

TCPN: REFER TABLE
PART Alias UTX/DUL: CC80-106-PL-M12
Cat No: REFER TABLE

MATERIAL DESC: -
MATERIAL NO: -
MATL SPEC/STD/DRG NO: -
PROCESS SPEC HEAT TREAT/PLATING NO

TITLE: CABLE CLEAT ∅80-∅92 AND ∅92-∅106 SLIDER PLATE

DRAWN: RN
DATE: 14-07-2014
CHECKED: RN
APPROVED: AT

TE Connectivity
2/3 Corella Close
Berkeley Vale NSW 2261 Australia

SIZE: A3
PROJECTION: 3RD ANGLE
SCALE: 3:5
DRAWING NO: AU29464
SHEET 1 OF 1
REV 1

Format: generic_ma3_au_rl.frm
Template: tec_generic_a3_metric_au_rl.drw
Dwg No from Pt Mod Fam Tbl:

DRAWING NO AU29464

THIS DRAWING IS A CONTROLLED DOCUMENT

THIS INFORMATION IS CONFIDENTIAL AND PROPRIETARY TO TE CONNECTIVITY CORPORATION AND ITS WORLDWIDE SUBSIDIARIES AND AFFILIATES. IT MAY NOT BE DISCLOSED TO ANYONE, OTHER THAN TE CONNECTIVITY PERSONNEL, WITHOUT WRITTEN AUTHORIZATION FROM TE CONNECTIVITY CORPORATION, AUSTRALIA.