© – TE Connectivity. All Rights Reserved.

PROJEKT NR.:	P	LTR	DESCRIPTION	DATE	DWN	APVD
A95-52354		C11	REVISED PER ECR-24-219996	21JAN2025	RK	MDG

REVISIONS

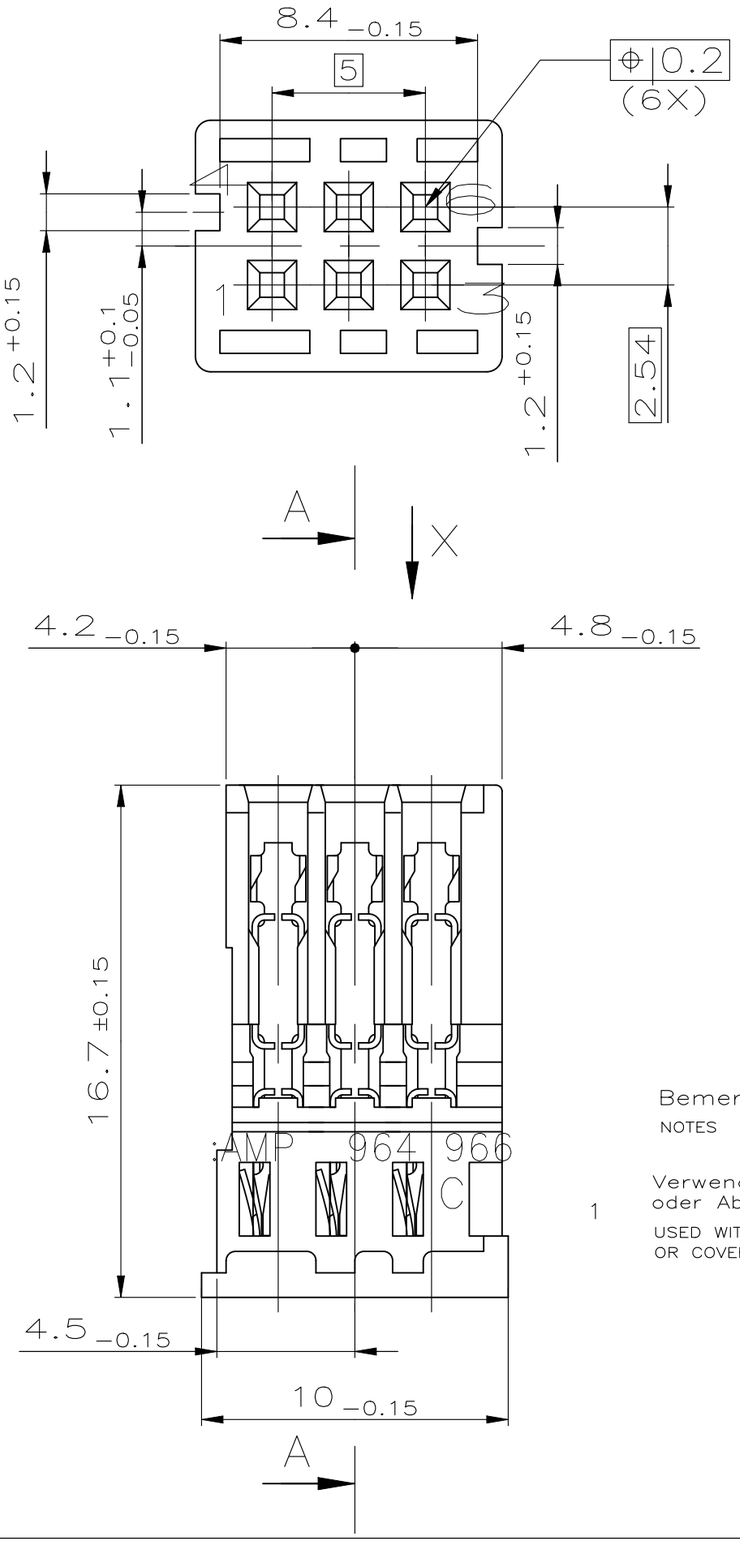

Schnitt A–A
SECTION

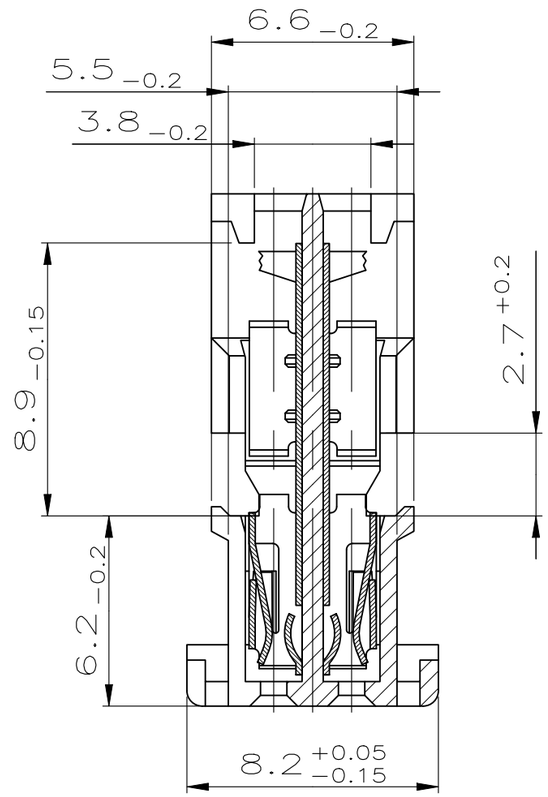

Ansicht "X"
VIEW "X"
Darstellung ohne Kontakte
SHOWN WITHOUT CONTACTS

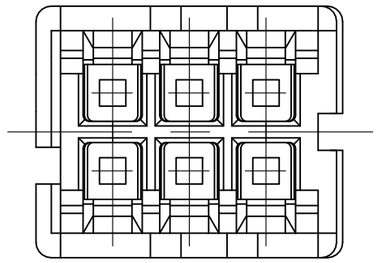

1	2	3	4	5	6					
	X	X	X	X		OBSOLETE ~~4-966 907-1~~	C	Contact Cu Sn / HOUSING PBT-GF	TIN PLATED verzinnt / BLACK schwarz	2 / 1
X		X	X	X	X	OBSOLETE ~~3-966 907-1~~	C	Contact Cu Sn / HOUSING PBT-GF	TIN PLATED verzinnt / BLACK schwarz	2 / 1
X	X	X				2-966 907-1	C	Contact Cu Sn / HOUSING PBT-GF	TIN PLATED verzinnt / BLACK schwarz	2 / 1
X	X	X	X	X		OBSOLETE ~~1-966 907-1~~	C	Contact Cu Sn / HOUSING PBT-GF	TIN PLATED verzinnt / BLACK schwarz	2 / 1
X	X	X	X	X	X	OBSOLETE ~~966 907-1~~	C	Contact Cu Sn / HOUSING PBT-GF	TIN PLATED verzinnt / BLACK schwarz	2 / 1
X	X	X	X	X	X	966 907-3	C	Contact Cu Sn / HOUSING PBT-GF	TIN PLATED verzinnt / WHITE weiss	2 / 1
	X	X	X	X	X	1-966 907-3	C	Contact Cu Sn / HOUSING PBT-GF	TIN PLATED verzinnt / WHITE weiss	2 / 1
X	X	X	X	X		2-966 907-3	C	Contact Cu Sn / HOUSING PBT-GF	TIN PLATED verzinnt / WHITE weiss	2 / 1
X		X	X		X	OBSOLETE ~~3-966 907-3~~	C	Contact Cu Sn / HOUSING PBT-GF	TIN PLATED verzinnt / WHITE weiss	2 / 1
X	X			X	X	4-966 907-3	C	Contact Cu Sn / HOUSING PBT-GF	TIN PLATED verzinnt / WHITE weiss	2 / 1
X	X	X	X		X	OBSOLETE ~~5-966 907-3~~	C	Contact Cu Sn / HOUSING PBT-GF	TIN PLATED verzinnt / WHITE weiss	2 / 1
		X	X	X		6-966 907-3	C	Contact Cu Sn / HOUSING PBT-GF	TIN PLATED verzinnt / WHITE weiss	2 / 1
X	X		X		X	OBSOLETE ~~7-966 907-3~~	C	Contact Cu Sn / HOUSING PBT-GF	TIN PLATED verzinnt / WHITE weiss	2 / 1
	X	X	X		X	8-966 907-3	C	Contact Cu Sn / HOUSING PBT-GF	TIN PLATED verzinnt / WHITE weiss	2 / 1
		X	X			9-966 907-3	C	Contact Cu Sn / HOUSING PBT-GF	TIN PLATED verzinnt / WHITE weiss	2 / 1
X	X	X	X			0-966 907-5	C	Contact Cu Sn / HOUSING PBT-GF	TIN PLATED verzinnt / WHITE weiss	2 / 1
X	X		X	X	X	OBSOLETE ~~1-966 907-5~~	C	Contact Cu Sn / HOUSING PBT-GF	TIN PLATED verzinnt / WHITE weiss	2 / 1

Kammer-Nr. bestueckt
CAVITY-NO. MOUNTED

FINISH

Bemerkungen
NOTES

Verwendet mit Verriegelungsdeckel 964 967(ASSY 966 909)
oder Abdeckkappe 969 269 (ASSY 969 555)

USED WITH LOCKING COVER 964 967 (ASSSY 966 909)
OR COVER 969 269 (ASSY 969 555)

Zeichnung nur fuer VW/AUDI und deren Zulieferer

THIS DRAWING IS A CONTROLLED DOCUMENT.

DIMENSIONS: mm

TOLERANCES UNLESS OTHERWISE SPECIFIED:
0 PLC ± –
1 PLC ± –
2 PLC ± –
3 PLC ± –
4 PLC ± –
ANGLES ±2°
DIN 16901 – 140

MATERIAL: SEE TABLE

FINISH: SEE TABLE

DWN D.Dünkel 05-MAR-97
CHK B.KIRSCH 06-MAR-97
APVD –
PRODUCT SPEC –
APPLICATION SPEC –
WEIGHT –

TE Connectivity

NAME
AMPMODU Tandem Spring MT REC.HSG.2x3POSN.,ASS'Y
–
AMPMODU Tandem Spring MT Gehäuse 2x3pol.,ZSB

SIZE	CAGE CODE	DRAWING NO	RESTRICTED TO
A3	00779	C-966907	–

CUSTOMER DRAWING | SCALE 2:1 | SHEET 1 OF 1 | REV C11

1470-19 (1/15)