THIS DRAWING IS UNPUBLISHED. RELEASED FOR PUBLICATION 2008
© COPYRIGHT 2008 BY - ALL RIGHTS RESERVED.

REVISIONS

P	LTR	DESCRIPTION	DATE	DWN	APVD
	A	NEW DRAWING	30OCT2008	SG	RJ
	C	ECR-10-001257	19JAN2010	Sche	CB
	C1	ECR-13-003504	25FEB2013	M.F.	M.G.
	C2	ADDED 963142-4 ECO-17-017752	30NOV2020	MAH.	AM

TE PN 963142-1/-2/-3

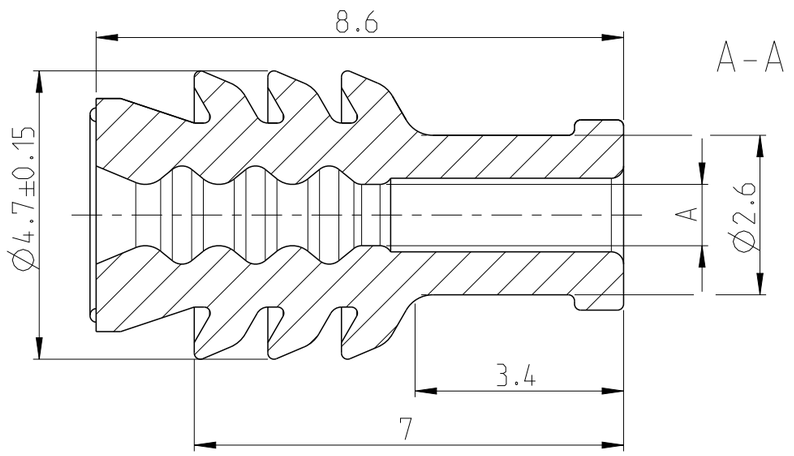

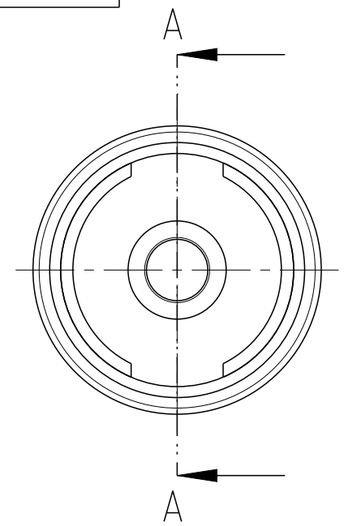

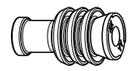

2:1

TE PN 963142-4

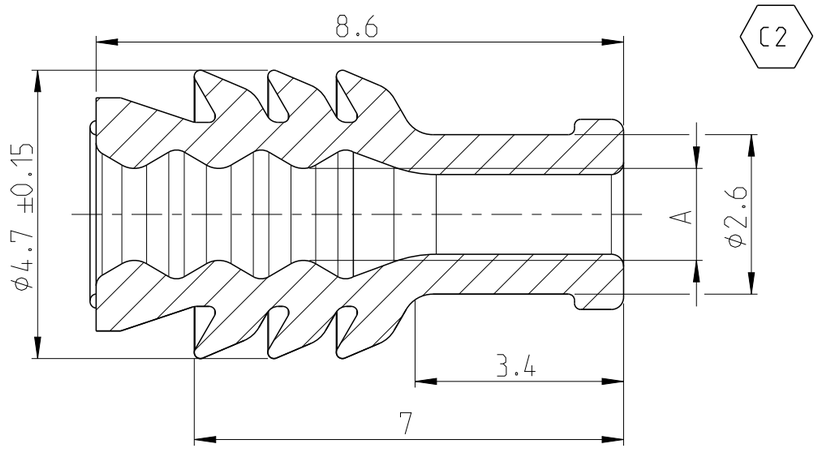

NOTES:

1 DETAILS OF DESIGN ARE LEFT TO MANUFACTURER

2 FOR ALLOCATION OF CONTACTS TO WIRE SIZE DIA AND RETAINING SINGLE WIRE SEAL. DRAWING OF CONTACT SYSTEMS SHALL BE BINDING

3 MOULD BURRS MAX 0.15mm PERMITTED

C2

TE PN ORDER NO	REV.	DIM. A	SUITABLE TO INSULATION DIA.	USED ON	COLOR	MATERIAL	OIL %	WEIGTH [g]
963142-4	C	Ø1.5 ± 0.15	Ø2.2 ÷ 2.4	Einzelleitung SINGLE WIRE	RED	Silikon VMQ 50	1.5% ÷ 2%	0.09
963142-3	C	Ø1 ± 0.15	Ø1.4 ÷ 2.4		blau/ LIGHT BLUE		4%	0.10
963142-2	C	Ø0.6 ± 0.15	Ø0.9 ÷ 1.3		grau/GREY		1.5 ÷ 2%	0.11
963142-1	C	Ø1 ± 0.15	Ø1.4 ÷ 2.4		schwarz/BLACK			0.10

THIS DRAWING IS A CONTROLLED DOCUMENT.

DIMENSIONS: mm

TOLERANCES UNLESS OTHERWISE SPECIFIED:
0 PLC ±-
1 PLC ±-
2 PLC ±-
3 PLC ±-
4 PLC ±-
ANGLES ±2°
M3 DIN 7715

MATERIAL -

FINISH -

DWN S. G. 30OCT2008
CHK C. Boemmel 30OCT2008
APVD R. Jetter 30OCT2008
PRODUCT SPEC -
APPLICATION SPEC -
WEIGHT -

TE Connectivity

NAME SINGLE WIRE SEAL FOR CAVITY DIA. 4.0

SIZE	CAGE CODE	DRAWING NO	RESTRICTED TO
A3	00779	C-963142	

RESTRICTED CUSTOMER

SCALE 10:1 SHEET 1 OF 1 REV C2

1470-19 (3/13)