THIS DRAWING IS UNPUBLISHED. RELEASED FOR PUBLICATION 2008
© COPYRIGHT 2008 Tyco Electronics AMP GmbH ALL RIGHTS RESERVED.

| LOC | DIST |
|---|---|
| A1 | – |

REVISIONS

| P | LTR | DESCRIPTION | DATE | DWN | APVD |
|---|---|---|---|---|---|
| | J5 | SET PN's OBSOLETE | 17JUN2014 | Ho. | Eder |
| | J6 | ECR-22-153256 | 21SEP2022 | FRAN | SCHI |
| | J7 | OBSOLETE PN 962942-5 | 23AUG2023 | FRAN | SCHI |
| | J8 | OBSOLETE PN 962942-3 | 17JAN2025 | FRAN | SCHI |

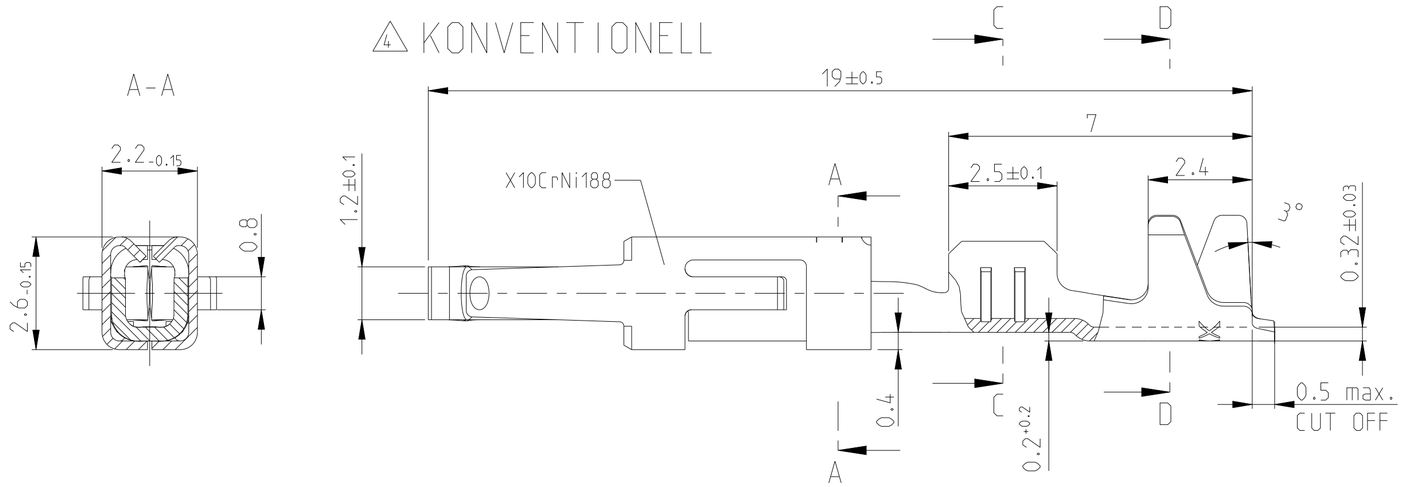


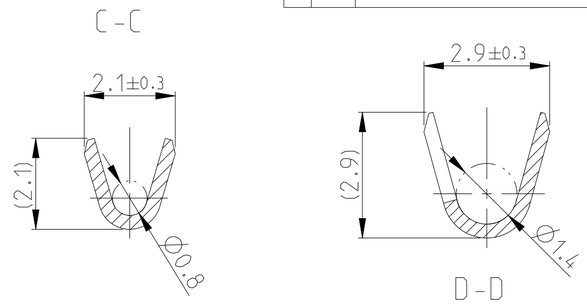


NOTES
Bemerkungen

1 SELECTIVE GOLD OVER NICKEL 0.8 µm MIN.
selektiv vergoldet ueber Nickel 0.8 µm min.

2 TIN PLATED OVER NICKEL 0.2 µm MIN.
verzinnt ueber Nickel 0.2 µm min.

3 WIRE RANGE : 0.2 - 0.5 mm²
INSULATION-Ø : 1.15 - 1.6 mm (FLR)
Drahtgroessenbereich : 0.2 - 0.5 mm²
Isolations-Ø : 1.15 - 1.6 mm (FLR)

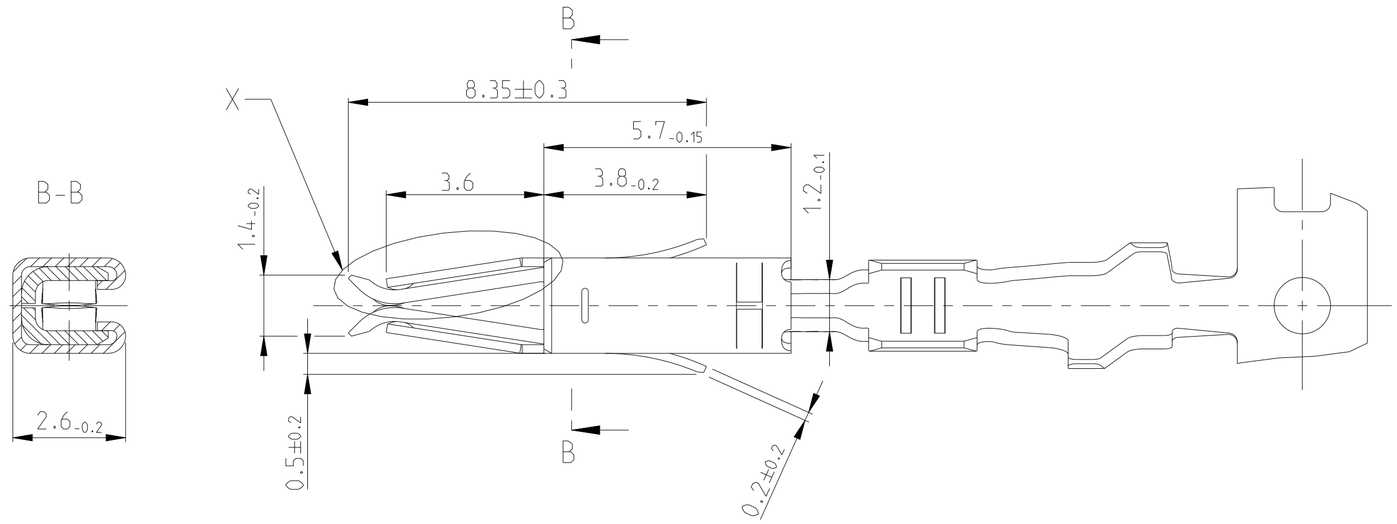


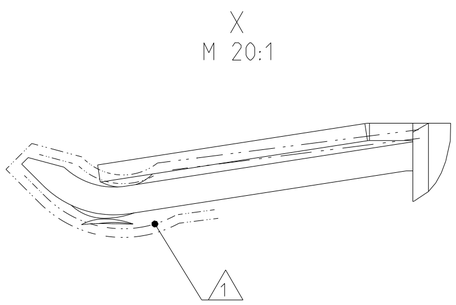


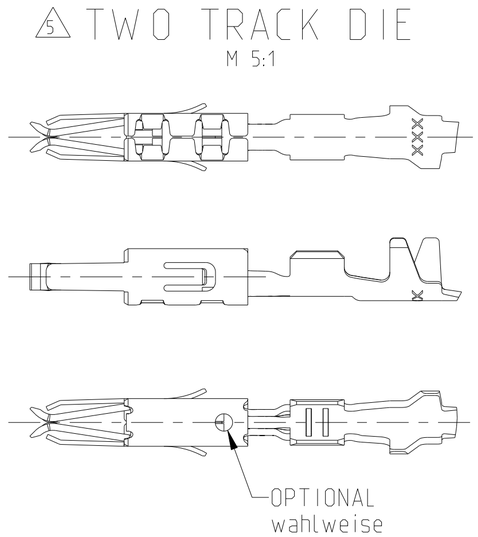


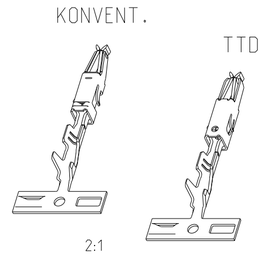


J8

| VERSION | LP NO | SURFACE / Oberflaeche | MATERIAL | PART NO | REV |
|---|---|---|---|---|---|
| 4 5 | 962944-5 | 1 2 | CuFe2 | 962942-5 | J |
| 4 5 | 962944-3 | 1 2 | CuSn4 | 962942-3 | J |
| 4 5 | 962944-2 | PRETIN | CuFe2 | 962942-2 | J |
| 4 5 | 962944-1 | PRETIN | CuSn4 | 962942-1 | J |

THIS DRAWING IS A CONTROLLED DOCUMENT.

DIMENSIONS: mm

TOLERANCES UNLESS OTHERWISE SPECIFIED:
0 PLC ±
1 PLC ±
2 PLC ± ±0.2
3 PLC ±
4 PLC ±
ANGLES ±2°

MATERIAL –
FINISH –

DWN 24JUL2003 M.Pfeilschifter
CHK 24JUL2003 M.Brunner
APVD 24JUL2003 M.Bleicher
PRODUCT SPEC 108-18055
APPLICATION SPEC 114-18081
WEIGHT 0.3 g

TE Connectivity

NAME
MICRO TIMER 2 CONTACT
Micro Timer 2 Kontakt
–

| SIZE | CAGE CODE | DRAWING NO | RESTRICTED TO |
|---|---|---|---|
| A2 | 00779 | C-962942 | – |

CUSTOMER DRAWING | SCALE 10:1 | SHEET 1 OF 1 | REV J8