© 2022 TE Connectivity. All Rights Reserved.

REVISIONS					
P	LTR	DESCRIPTION	DATE	DWN	APVD
	C5	REVISED PER ECR-24-226753	06JUN2025	RK	YHK

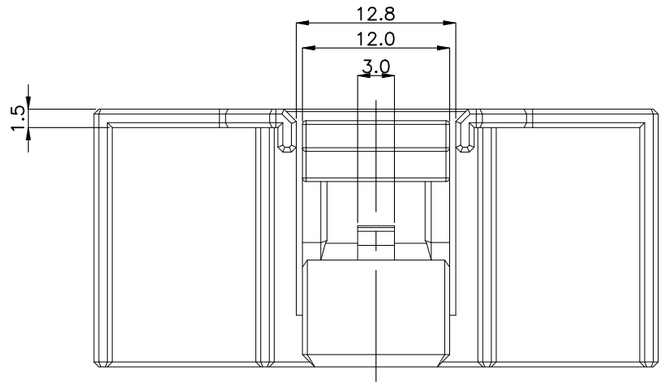

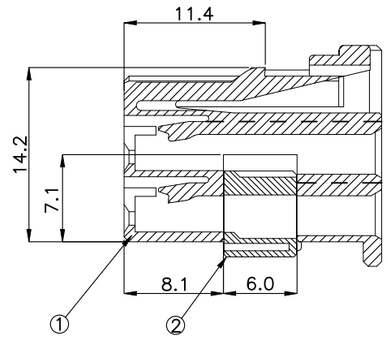

SECTION A-A

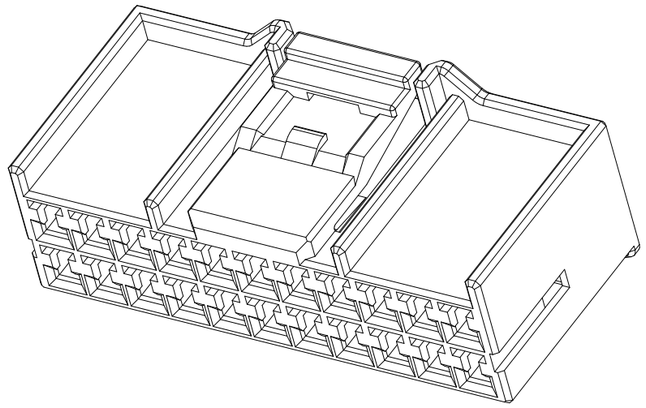

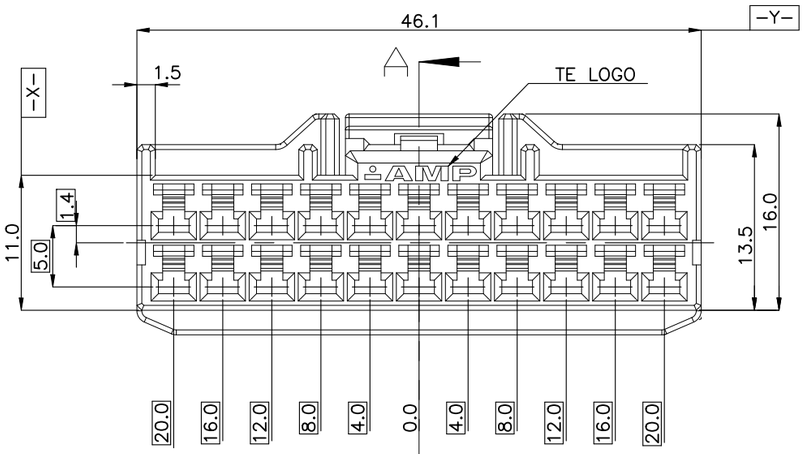

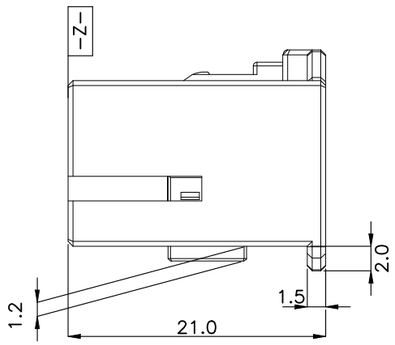

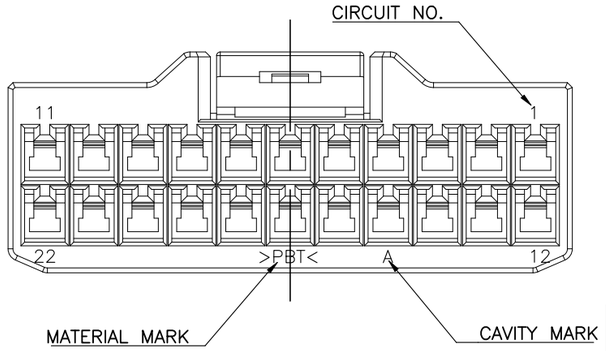

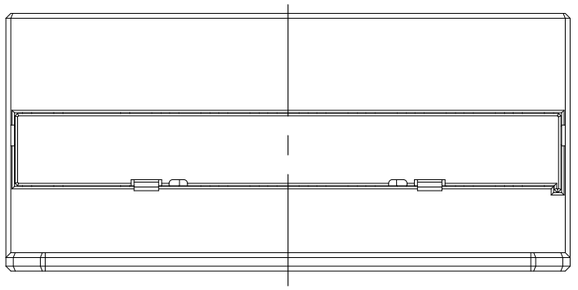

NO	COLOR	MATERIAL	DESCRIPTION	P/N	ASSY P/N 1-936151-3 ⓒ1	0-936151-8 OBSOLETE	0-936151-7	0-936151-6	0-936151-5	0-936151-4	0-936151-3	0-936151-2	0-936151-1
1	D/GRAY	PBT	PLUG	1-936152-3	1								
	BLUE	PBT	PLUG	0-936152-8		1							
	GREEN	PBT	PLUG	0-936152-7			1						
	RED	PBT	PLUG	0-936152-6				1					
	YELLOW	PBT	PLUG	0-936152-5					1				
	BROWN	PBT	PLUG	0-936152-4						1			
	L/GRAY	PBT	PLUG	0-936152-3							1		
	BLACK	PBT	PLUG	0-936152-2								1	
	NATURAL	PBT	PLUG	0-936152-1									1
2	NATURAL	PBT	DBL	0-936153-1	1	1	1	1	1	1	1	1	1

TOLERANCES UNLESS OTHERWISE SPECIFIED:

0 <XX<10	± 0.2
10<XX<30	± 0.25
30<XX	± 0.3
ANGLES	± 3°

NOTES.
1. THE MATING HSG. P/N ; 936154
2. APPLIED CONTACT P/N ;
   090 II REC. - 368083, 368084, 368085
   090 III REC. - 1743654, 1743655, 1743656, 1897753, 1897598

-주기-
1. 상대 하우징 P/N. ; 936154
2. 적용단자 P/N. ; 090 II REC. - 368083, 368084, 368085
   090 III REC. - 1743654, 1743655, 1743656, 1897753, 1897598

THIS DRAWING IS A CONTROLLED DOCUMENT.

DIMENSIONS: mm

TOLERANCES UNLESS OTHERWISE SPECIFIED:

0 PLC	± –
1 PLC	± –
2 PLC	± –
3 PLC	± –
4 PLC	± –
ANGLES	± –

MATERIAL –

FINISH –

DWN SJ CHOI –
CHK JW JUNG –
APVD HG CHO –
PRODUCT SPEC —
APPLICATION SPEC —
WEIGHT 0

TE Connectivity

NAME 090III 22P PLUG ASS'Y
–
–

SIZE	CAGE CODE	DRAWING NO	RESTRICTED TO
A3	00779	C-936151	—

CUSTOMER DRAWING

SCALE	SHEET	REV
2:1	1 OF 1	C5