© 2025 TE Connectivity. All Rights Reserved.

| REVISIONS | | | | | | |
|---|---|---|---|---|---|---|
| P | LTR | DESCRIPTION | | DATE | DWN | APVD |
| | B | ECN-24-258270 | HEX NUTS AND WASHERS LOOSELY ENCLOSED IN BAG | 28APR2024 | KS | RB |
| | C | ECN-24-306280 | SCREW CHANGE (TORX) | 18FEB2025 | KS | RB |
| | | | | | | |
| | | | | | | |

ELECTRICAL

| | |
|---|---|
| VOLTAGE RANGE | 18-32 VDC |
| NOMINAL VOLTAGE | 24 VDC |
| INSULATING RESISTANCE, INITIAL | 100 MOHM |
| INSULATING RESISTANCE, AFTER LIFE | 50 MOHM |
| DIELECTRIC WITHSTANDING VOLTAGE | 500 VAC |
| CONTACT DUTY RATING | 300 AMP |
| CONTACT OVERLOAD | 2400 AMP 1 SEC/ 600 AMP 20 SEC |
| CONTACT VOLTAGE DROP INITIAL | 150 mV |
| CONTACT VOLTAGE DROP AFTER LIFE | 175 mV |
| CONTACT LIFE AT NOMINAL VOLTAGE (OHMIC) | 50000 CYCLES |
| CONTACT LIFE MECHANICAL | 100000 CYCLES |
| PULL-IN COIL IMPULSE | APPROX. 3.0 AMP/100MS |
| DROP-OUT COIL IMPULSE | APPROX. 2.8 AMP/100MS |
| INPUT RESERVE X1-4 | RESERVED FOR FUTURE FUNCTIONS |
| INPUT TEST X1-1 | RESERVED FOR FUTURE FUNCTIONS |

GENERAL CHARACTERISTICS

| | |
|---|---|
| TEMPERATURE RANGE | -40°C TO +85°C (-40°F TO +185°F) |
| SEALING/PROTECTION | IP 6K9K (DIN40050-9 AND IEC 529.2) |
| SHOCK G-LEVEL | ISO/DIS 16750-3: 4.2.2.2 CLASS A |
| VIBRATION | ISO/DIS 16750-3: 4.1.3.2.3 TEST 7 |
| RESISTANCE TO SOLVENTS | ISO/DIS 16750-5 $Z_A$ |
| MATERIAL HOUSING | PBT SG 0 SW GF30 |
| MATERIAL TERMINALS | CuZn gal. CuSn |
| ELECTRONIC PCB | MOULDED |
| WIRE SECTION (NOMINAL LOAD 300 AMP) | 95mm² |
| MOUNTING POSITION | OPTIONAL |
| WEIGHT | APP. 900 gr |

CERTIFICATION ..... TÜ.EGG. 086-04
ADR2015 9.2.2.3
FOR CONTROL UNIT:$T_a$=-40°C TO 50 /85°C
(Ex) II2G EEx m ib IIC T6/T4

TIME ADJUSTMENT:

OUTPUT AND INPUT CHARACTERISTICS:
ALL THE TIME VALUES OR INPUT-OUTPUT PROCESSES DECLARED MAY BE MODIFIED BY REVISING THE APPROPRIATE SOFTWARE PROGRAM.
IDLE CURRENT < 5mA (WITHOUT EXTERNAL COMPONENTS I.E. INTRINSIC SAFE CIRCUIT).
OUTPUTS X1-5 AND X1-7: ELECTRICAL LOAD < 300mA. PROTECTION AGAINST SHORT CIRCUIT AND REVERSE VOLTAGE.

FUNCTION

NORMAL SWITCH ON:
THE MAIN SWITCH (88-88a) WILL CLOSE IF THE EMERGENCY SWITCHES S2 AND S3 AND THE IGNITION SWITCH S1 ARE CLOSED.

NORMAL SWITCH OFF:
IF ONLY THE IGNITION SWITCH S1 (X2-2) IS OPENED THE MAIN SWITCH TURNS OFF AFTER A DEFINED TIME I.E: 2 MINUTES.

EMERGENCY SWITCH OFF/ON:
A POLLING SEQUENCE CHECKS THE ABILITY TO SWITCH THE EMERGENCY SIGNAL PATH TO DETECT AN ERROR IF THE OPERATION OF THE EMERGENCY STOP SWITCH CAN NOT LEAD TO SHUTDOWN.

TRANSITION FROM "CLOSED" TO "OPEN":
IF A LOW LEVEL IS DETECTED AT PIN X2-3 AND PIN X2-4, THE MAIN SWITCH SEPARATES THE BATTERIES FROM THE ELECTRICAL SYSTEM. THE SHUTDOWN SHOULD OCCUR WITHIN 3 SECONDS.
APPROXIMATELY 1 SEC. BEFORE THE CONTACT IS OPENED, THE OUTPUT X1-5 SHOULD BE SWITCHED OFF.

TRANSITION FROM "OPEN" TO "CLOSED"
ONCE A HIGH LEVEL IS DETECTED AT PIN X2-3 AND PIN X2-4, AND S1 (ATX2:2) IS CLOSED, THE MAIN SWITCH IS CLOSED AND THE OUTPUT X1-5 IS SWITCHED ON.

THE OUTPUT PIN X1-7 SENDS A POSSIBLE FAULT SIGNAL TO THE INSTRUMENT.

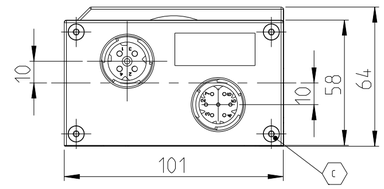


VIEW WITHOUT COVER

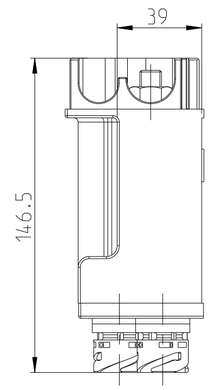


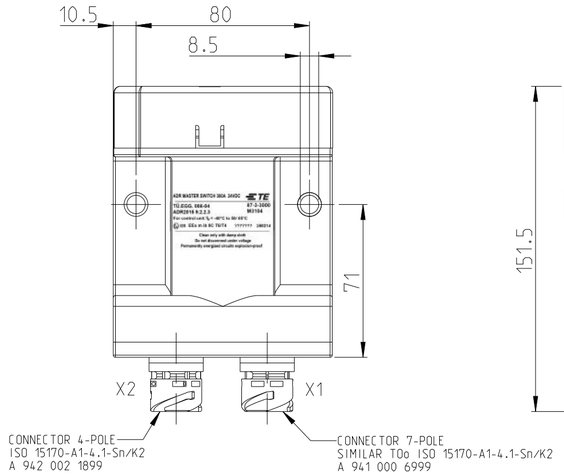


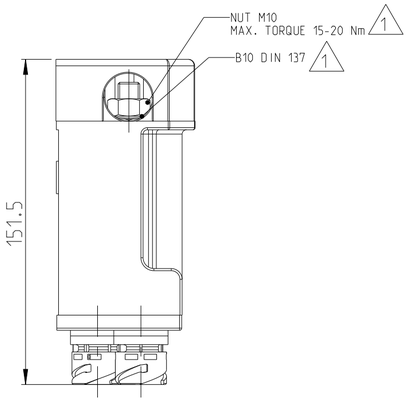


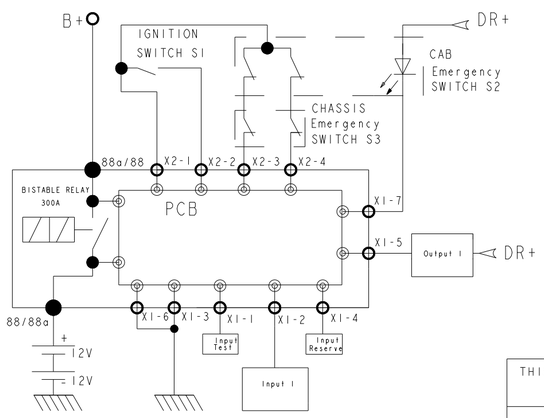


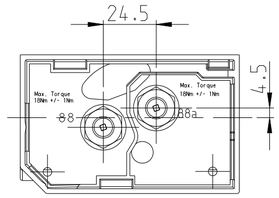


VIEW WITHOUT COVER

1 HEX NUTS AND WASHERS ARE LOOSELY ENCLOSED IN A BAG

| | | | |
|---|---|---|---|
| THIS DRAWING IS A CONTROLLED DOCUMENT. | DWN K.Seeger 23APR2015 | TE Connectivity | |
| DIMENSIONS: mm | CHK U.Grindemann 10NOV2015 | | |
| TOLERANCES UNLESS OTHERWISE SPECIFIED: DIN ISO 2768 cL | APVD U.Grindemann 11NOV2015 | NAME ADR / GGVS ADR / GGVS | |
| 0 PLC ± 1 PLC ± 2 PLC ± 3 PLC ± 4 PLC ± ANGLES ± | PRODUCT SPEC | | |
| | APPLICATION SPEC | | |
| MATERIAL / FINISH | WEIGHT | SIZE A2 / CAGE CODE 00779 / DRAWING NO C-87-3-3000 | RESTRICTED TO - |
| | CUSTOMER DRAWING | SCALE 1:2 / SHEET 1 OF 1 | REV C |

1471-9 (3/13)