Electrical

Voltage Range ..... 18-32 VDC
Nominal Voltage..... 24 VDC
Min.Insulation resistance..... 100 MOhm
Insulation resistance, after lifeng ..... 50 MOhm
Dielectric withstanding voltage..... .500 VAC
Contact duty ratingt) ..... 300 Amp
Contact overload.....2400 Amp 1 sec/ 600 Amp 20 sec
Contact voltage drop initial ..... 150 mV
Contact voltage drop after life ..... 175 mV
Contact life at nominal voltage (ohmic) ..... 50 000 cycles
Contact life mechanical ..... 100 000 cycles
Pull-in Coil impulse.....ca.3,0A/100ms
Drop-out coil impulse ca.2,8A/100ms
Input Reserve X1-4 ..... reserved for future functions
Input Test X1-1 ..... reserved for future functiions

General Characteristics

Temperature range ..... -40°C to +85°C (-40°F to +185°F)
Sealing/Protection..... IP 6K9K (DIN40050-9 and IEC 529.2)
Shock G-Level ..... ISO/DIS 16750-3: 4.2.2.2 Class A
Vibration ..... ISO/DIS 16750-3: 4.1.3.2.3 Test 7
Resistance to solvents .....ISO/DIS 16750-5 Z
Material housing ..... PBT SG OW GF30
Material terminals ..... CuZn gal.Cu Sn
Electronic pcb ..... moulded
Wire section (nominal load 300 Amp) 95mm
Mounting position ..... optional
Weight .....~900gr.
Certification ..... TUE.EGG. 086-04
ADR2015 9.2.2.3
for control unit:T =-40°C 50 /85°C
II3G Ex m ib IIC T6 / T4

Time Adjustment:
Out- and Input Characteristics:

All the time values or input-output processes declared may be modified by revising the appropriate software program.
Idle current < 5mA (without external components i.e. intrinsic safe circuit).
Outputs X1-5 and X1-7: electrical load < 300mA, protection against short circuit and reverse voltage.

Function

Normal switch on:
The main switch (88-88a) will close if the emergency switches S2 and S3 and the ignition switch S1 are closed.

Normal switch off:
If only the ignition switch S1 (X2-2) is opened the main switch turns off after a defined time i.e. 2min.

Emergency switch off/on:
A polling sequence checks the ability to switch the emergency signal path to detect an error if the operation of the emergency stop switch can not lead to shutdown.

Transition from "closed" to "open":
If a low level is detected at pin X2-3 and pin X2-4, the main switch separates the batteries from the electrical system. The shutdown should occur within 3 seconds.
Approximately 1 sec before the contact is opened, the output X1-5 should be switched off.

Transition from "open" to "closed":
Once a high level is detected at pin X2-3 and pin X2-4, and S1 (at X2.2) is closed, the main switch is closed and the output X1-5 is switched on.

The output pin X1-7 sends a possible fault signal to the instrument.

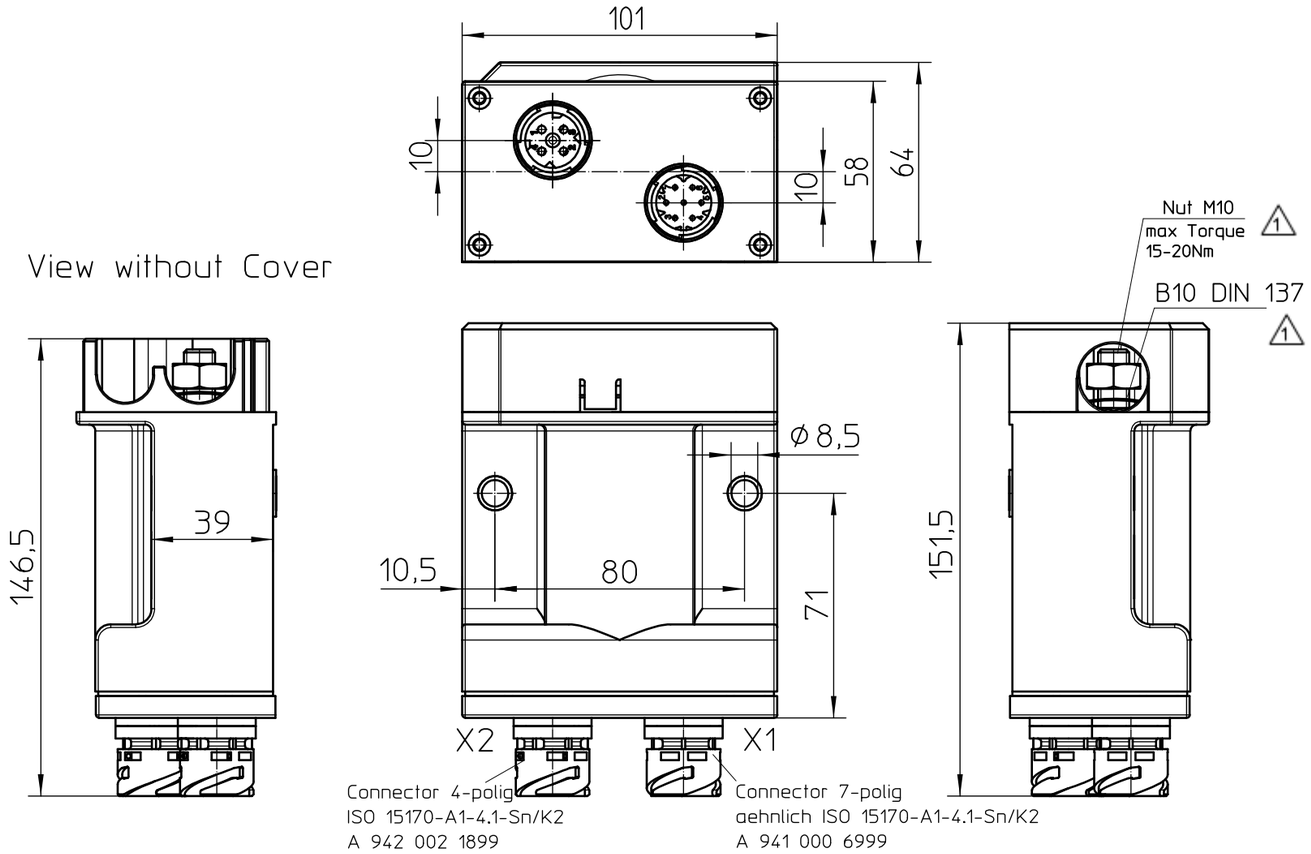

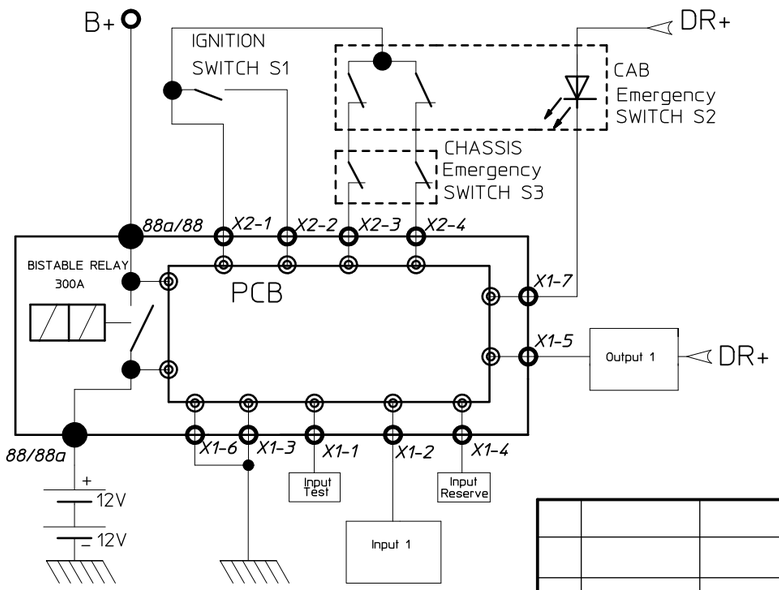

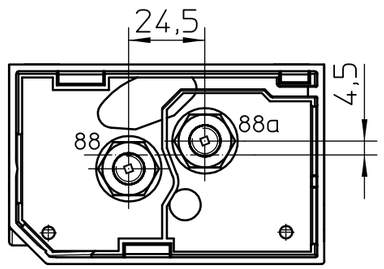

View without Cover

1 HEX NUTS AND WASHERS ARE LOOSELY ENCLOSED IN A BAG

Lfd. Nr.	TÄ-Nummer	Art der Änderung	Datum	Name
1	ECN-24-258270	HEX Nuts and Washers loosely enclosed in a bag	28APR2024	KS

	Datum	Name
Erstel.	23.04.2015	Seege
Bearb.	10.11.2015	Grind
Freig.	11.11.2015	Grind

Allgemeintoleranz: DIN ISO 2768 cL
Maßstab: 1:2
Bl. 1 v. 1

Werkstückkanten DIN ISO 13715
Oberfläche
Werkstoff
Benennung: ADR/GGVS
01157163
Zeichnungsnummer: 87-3-3000
Ers. f.
Ers. d.

Für diese Zeichnung behalten wir uns das Urheberrecht gemäß DIN ISO 16016 vor

Zeichnungsnummer 87-3-3000