THIS DRAWING IS UNPUBLISHED. RELEASED FOR PUBLICATION -,- .
© COPYRIGHT - By - ALL RIGHTS RESERVED.

REVISIONS					
P	LTR	DESCRIPTION	DATE	DWN	APVD
	Y7	PART OBSOLESCENCE	09AUG2024	RS	VG

MODU II SHROUDED POSTS

MODU II Stiftleiste

SINGLE ROW 3 TO 50 POS.
Einreihig 3 bis 50 pol.

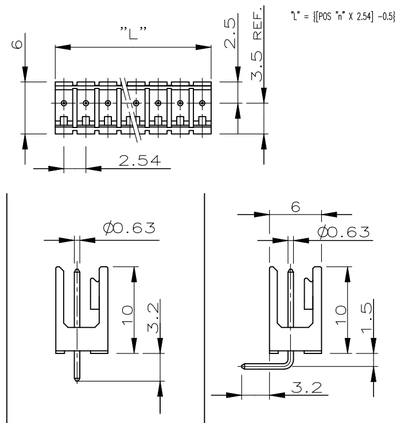

DOUBLE ROW 2x3 TO 2x50 POS.
Zweireihig 2x3 bis 2x50 pol.

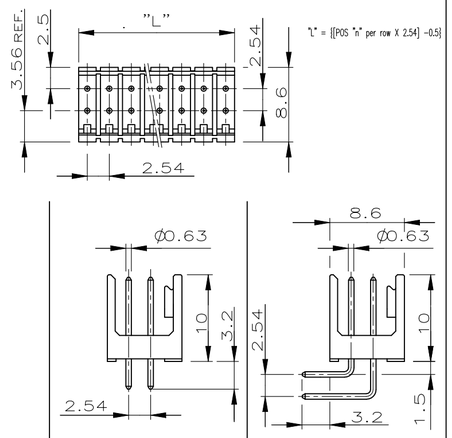

POS.	PART NUMBERS	PART NUMBERS
3 (2) TO 50	1 826467-3 BIS ~~5-826467-0~~	1 826468-3 BIS 5-826468-0
	2 ~~827295-2 BIS~~ 3 ~~5-827295-0~~ 3	2 827296-3 BIS ~~5-827296-0~~ 3

POS.	PART NUMBERS	PART NUMBERS
2x3 TO 2x50	1 826469-3 BIS 5-826469-0	1 826470-2 BIS 5-826470-0
	2 ~~827297-3 BIS~~ 3 ~~5-827297-0~~ 3	2 ~~827298-3 BIS~~ 3 ~~5-827298-0~~ 3

RETENTION PLUG
Rastgabel

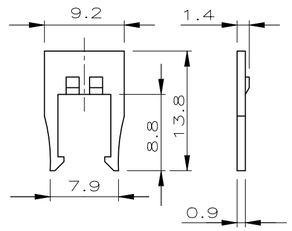

PART NUMBERS	COLOUR
926477-1	BLACK
~~926477-2~~ 4	GREEN
~~926477-3~~ 4	RED

RETENTION PLUG WITH STRAIN RELIEF
Rastgabel mit Zugentlastung

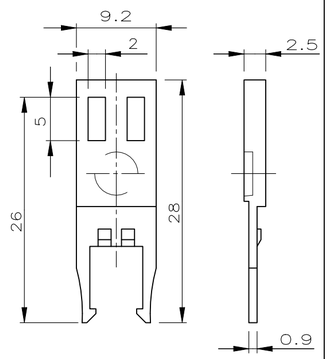

PART NUMBERS	COLOUR
926478-1	BLACK
~~926478-2~~ 5	GREEN
~~926478-3~~ 5	RED

KEYING PLUG
Kodierstift

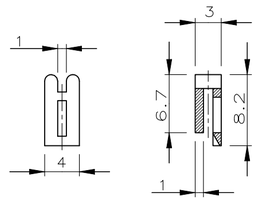

PART NUMBERS	COLOUR
926498-1	BLACK
926498-2	GREEN
926498-3	RED

KEYING BLOCK
Kodierblock

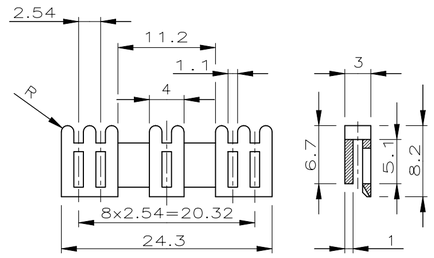

PART NUMBERS	COLOUR
~~927607-1~~ 3	BLACK
~~927607-2~~ 3	GREEN
~~927607-3~~ 3	RED

MODU IV RECEPTACLE HOUSING
MODU IV Buchsengehäuse

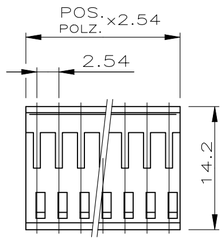

SINGLE ROW
2 TO 36 POS.
Einreihig
2 bis 36 polig.

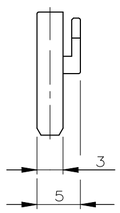

DOUBLE ROW
2x2 TO 2x36 POS.
Zweireihig
2x2 bis 2x36 polig

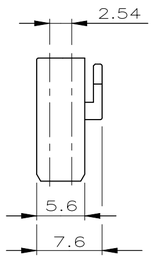

POS.	PART NUMBERS	POS.	PART NUMBERS
2 TO 36	926475-2 3-926475-6	2x2 TO 2x36	926476-2 3-926476-6

FFC HOUSING
FFC Gehäuse

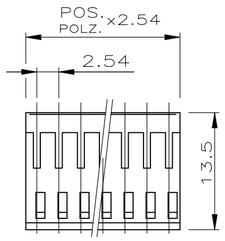

DOUBLE ROW
2x3 TO 2x13 POS.
Zweireihig
2x3 bis 2x13 polig

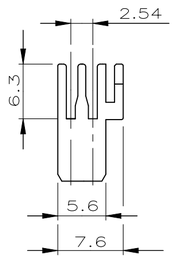

POS.	PART NUMBERS
2x3 TO 2x13	~~927009-3~~ 3 1-~~927009-3~~ 3

ASSEMBLED COMPONENTS (FOR EXAMPLE)
Anwendungsbeispiel

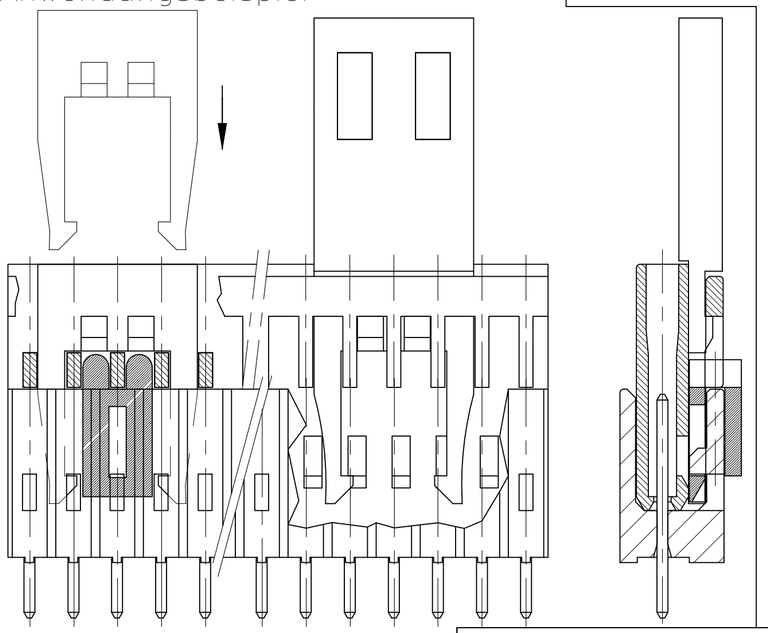

826467

THIS DRAWING IS A CONTROLLED DOCUMENT.

DIMENSIONS: mm

TOLERANCES UNLESS OTHERWISE SPECIFIED: ±0.2mm
0 PLC ± -
1 PLC ± -
2 PLC ± -
3 PLC ± -
4 PLC ± -
ANGLES ± -

MATERIAL -
FINISH -

DWN	A.HO	08MAR1985
CHK	M.SCHAARSCHMIDT	02MAY1985
APVD	—	-
PRODUCT SPEC	—	
APPLICATION SPEC	—	
WEIGHT		

TE Connectivity

NAME: AMPMODU II / AMPMODU IV

SIZE	CAGE CODE	DRAWING NO	RESTRICTED TO
A2	00779	C-826467	—

CUSTOMER DRAWING | SCALE 2:1 | SHEET 1 OF 2 | REV Y7

1471-9 (1/15)

THIS DRAWING IS UNPUBLISHED. RELEASED FOR PUBLICATION -,- .
© COPYRIGHT - By - ALL RIGHTS RESERVED.

REVISIONS					
P	LTR	DESCRIPTION	DATE	DWN	APVD
	-	SEE SHEET 1	-	—	—

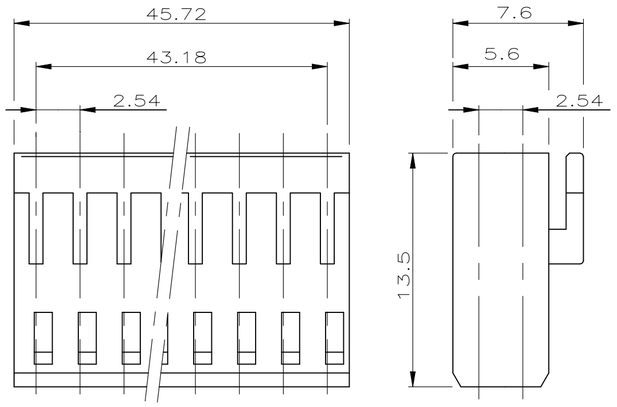

PN 6-926476-8

2x18 POS. AMPMODU IV RECEPTACLE HOUSING

2x18 POL. AMPMODU IV BUCHSENGEHÄUSE

PACKAGING
Verpackung

PART NUMBER 5-826467-3 INCLUDING 75 PCS. OF PN 826467-3
PACKED IN PLASTIC BOX (78mm x 78mm x 45mm)
FOR TE-HARRISBURG ONLY

Bestell- Nummer 5-826467-3 enthällt 75 Stk. PN 826467-3
verpackt in Kunststoffschachtel (78mm x 78mm x 45mm)
nur für TE-Harrisburg

1 CONTACT PIN/Kontaktstift: CuZn
PLATING MATING AREA:
MATING SIDE: Min 0.76µm (PdNi + Au FLASH)IN ZONE "F" OVER Min 1.27µm Ni
(Alternative plating - Min 0.76µm Au OVER Min 1.27µm Ni)
SOLDER SIDE: MIN 3.0µm Sn OVER 1.27µm Ni

2 CONTACT PIN/Kontaktstift: CuSn
PRE TIN PLATED MIN. 2.0µm Sn OVER 1.27µm
Ni (PIN TIPS BLANK)
Vorverzinnt min. 2.0µm Sn über 1.27µm Ni
(Stiftspitzen blank)

MATERIAL:

PIN HEADER Stiftgehäuse	PCT-GV	BLACK/schwarz
RECEPTACLE HOUSING Buchsengehäuse	PBT-GV	BLACK/schwarz
RETENTION PLUGS Rastgabeln	PC-GV	
KEYING PLUG AND BLOCK Kodierstift, -block	PA 6.6 GV	
FFC HOUSING FFC Gehäuse	PBT-GV	BLACK/schwarz

3 OBSOLETE PARTS

4 SUPERSEDED BY 926477-1

5 SUPERSEDED BY 926478-1

826467

THIS DRAWING IS A CONTROLLED DOCUMENT.

DIMENSIONS: mm

TOLERANCES UNLESS OTHERWISE SPECIFIED: ±0.2mm
0 PLC ± -
1 PLC ± -
2 PLC ± -
3 PLC ± -
4 PLC ± -
ANGLES ± -

MATERIAL -
FINISH -

DWN 270CT1985 M.SCHAARSCHMIDT
CHK 300CT1985 W.MORITZ
APVD -
PRODUCT SPEC —
APPLICATION SPEC —
WEIGHT

TE Connectivity

NAME AMPMODU II / AMPMODU IV

SIZE	CAGE CODE	DRAWING NO	RESTRICTED TO
A2	00779	C-826467	—

CUSTOMER DRAWING | SCALE 2:1 | SHEET 2 OF 2 | REV Y7