THIS DRAWING IS UNPUBLISHED. RELEASED FOR PUBLICATION 20
© COPYRIGHT 20 BY TYCO ELECTRONICS CORPORATION. ALL RIGHTS RESERVED.

LOC	DIST
CM	00

REVISIONS

P	LTR	DESCRIPTION	DATE	DWN	APVD
	A1	REVISED PER ECR-21-117185	25OCT2021	PJ	VS

1. PART MUST COMPLY WITH AMP SOLDERABILITY SPEC 109-11-5.
2. RECOMMENDED EXPOSURE TO SOLDER WAVE 254 C (490 F) NOT TO EXCEED 5 SECONDS.
3. DIMENSIONS IN BRACKETS ARE IN INCHES.
4. DIMENSION SHOWN REPRESENT PRODUCT IN DRY CONDITION. ADDITIONAL 2% GROWTH DUE TO END USE LOCATION MOISTURE ABSORPTION MAY OCCUR AND SHOULD BE ACCOUNTED FOR.

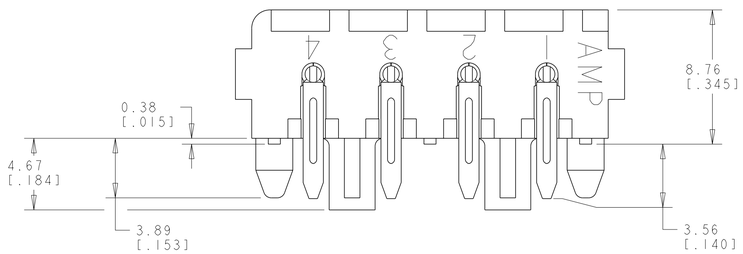

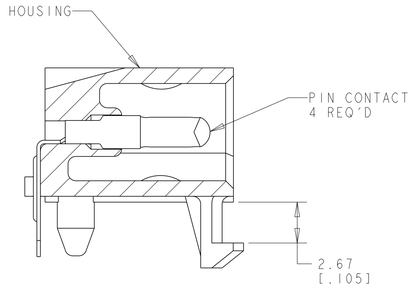

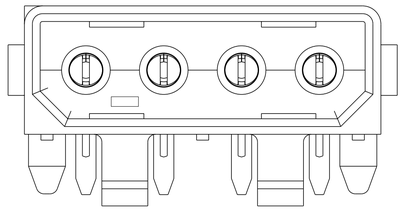

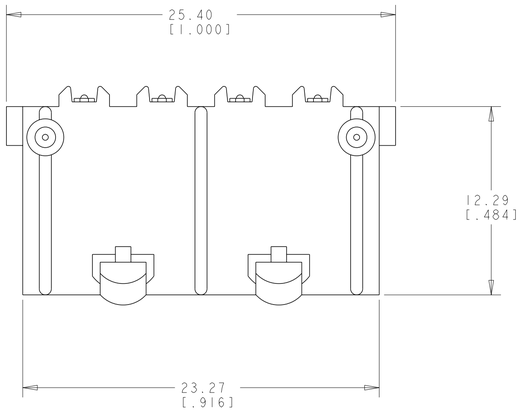

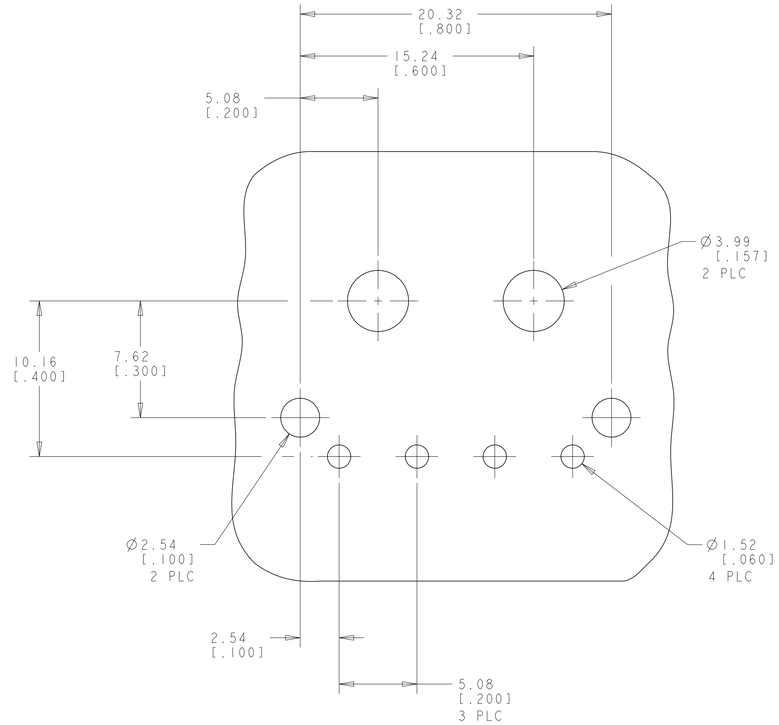

RECOMMENDED MOUNTING HOLE PATTERN
FOR 2.36 [.093] THICK P.C. BOARD

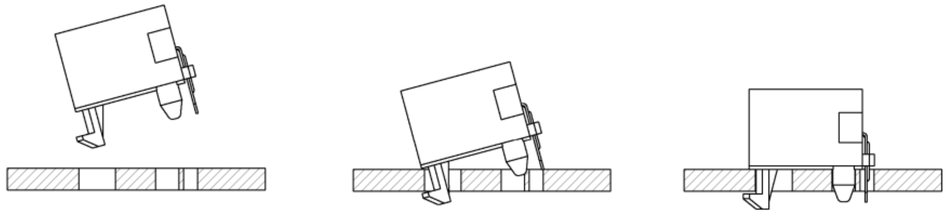

MOUNTING PROCEDURE

METRIC

PH BRZ	PRE-TIN	NYLON,94V-2	NATURAL	794697-1
MATERIAL	FINISH	MATERIAL	COLOR	PART NO
PIN		HOUSING		

THIS DRAWING IS A CONTROLLED DOCUMENT FOR TYCO ELECTRONICS CORPORATION. IT IS SUBJECT TO CHANGE AND THE CONTROLLING ENGINEERING ORGANIZATION SHOULD BE CONTACTED FOR THE LATEST REVISION.

DIMENSIONS: mm[INCHES]

TOLERANCES UNLESS OTHERWISE SPECIFIED:
0 PLC ±-
1 PLC ±-
2 PLC ±0.13 [.005]
3 PLC ±-
4 PLC ±-
ANGLES ±0° 30'

MATERIAL - -
FINISH - -

DWN 01-MAY-2003 K. WHITAKER
CHK 01-MAY-2003 D. COLEY
APVD 01-MAY-2003 D. COLEY
PRODUCT SPEC -
APPLICATION SPEC -
WEIGHT -

tyco Electronics
Tyco Electronics
Harrisburg, PA 17105-3608

NAME CONNECTOR ASSEMBLY,P.C. HEADER, RIGHT ANGLE MOUNT, 4 CIRCUIT, COMMERCIAL MATE-N-LOK TM

SIZE	CAGE CODE	DRAWING NO	RESTRICTED TO
A1	00779	C-794697	-

CUSTOMER DRAWING | SCALE 5:1 | SHEET 1 OF 1 | REV A1

printed on 25 Oct 2021 18:21 (India Standard Time) from TE428820