THIS DRAWING IS UNPUBLISHED. RELEASED FOR PUBLICATION 20
© COPYRIGHT 20 BY - ALL RIGHTS RESERVED.

REVISIONS

P	LTR	DESCRIPTION	DATE	DWN	APVD
	G5	REVISED PER ECN-23-240910	23NOV2023	WLS	VS
	G6	REVISED PER ECN-24-279340	15AUG2024	WLS	JP
	H	REVISED PER ECN-25-323497	26MAY2025	WLS	JP

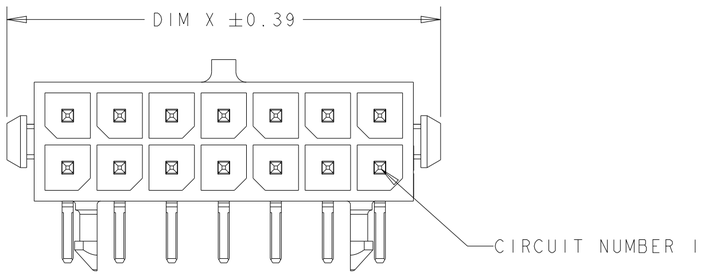

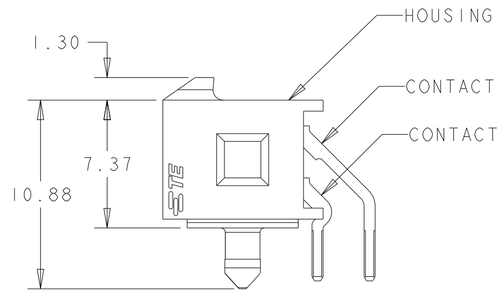

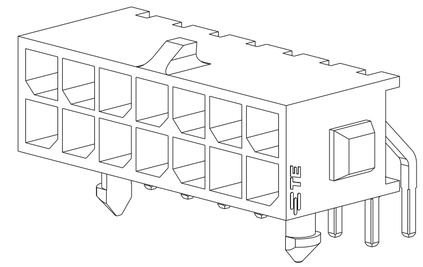

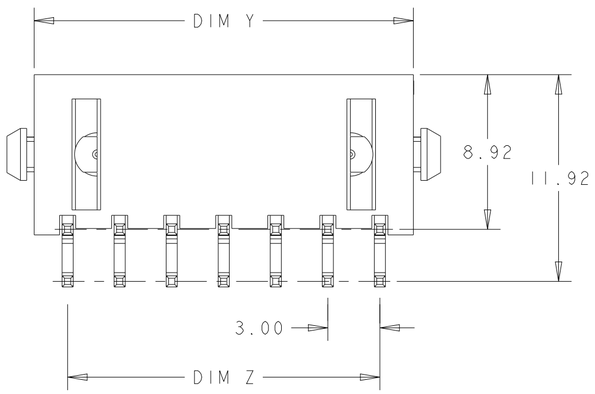

1. MATERIAL: HOUSING - UL 94V-0 RATED HIGH TEMP NYLON, COLOR BLACK.
   CONTACTS - BRASS.
2. RECOMMENDED PC BOARD THICKNESS OF 1.57.
3. PLATING: CONTACTS - 0.76µm MINIMUM GOLD,
   OR
   0.0762µm MINIMUM GOLD FLASH OVER 0.69µm MINIMUM PALLADIUM NICKEL,
   ON MATING AREA PER TE CONNECTIVITY'S DISCRETION,

   2.54µm MINIMUM MATTE TIN ON SOLDER TAILS.

   ALL OVER 1.27µm MINIMUM NICKEL.
4. PACKAGE REVERSE TAPED.
5. COUNTERPART RECOMMENDED IS PN 794617(DASH ACCORDING TO NUMBER OF POSITION).
6. FOR REELING DIRECTION AND PACKAGING TYPE, SEE SPECIFICATION 114-13000.

	DIM Y	DIM W	DIM Z	DIM X	NO. OF POSN.	PART NUMBER
OBSOLETE	~~18.86~~	~~10.70~~	~~15.00~~	~~22.00~~	~~12~~	4 ~~7-794620-2~~
	36.86	28.70	33.00	40.00	24	5-794620-4
	33.86	25.70	30.00	37.00	22	5-794620-2
OBSOLETE	~~30.86~~	~~22.70~~	~~27.00~~	~~34.00~~	~~20~~	~~5-794620-0~~
OBSOLETE	~~27.86~~	~~19.70~~	~~24.00~~	~~31.00~~	~~18~~	~~4-794620-8~~
	24.86	16.70	21.00	28.00	16	4-794620-6
	21.86	13.70	18.00	25.00	14	4-794620-4
	18.86	10.70	15.00	22.00	12	4-794620-2
	15.86	7.70	12.00	19.00	10	4-794620-0
	12.86	4.70	9.00	16.00	8	3-794620-8
	9.86	-	6.00	13.00	6	3-794620-6
	6.86	-	-	10.00	4	3-794620-4
	3.86	-	-	7.00	2	3-794620-2

THIS DRAWING IS A CONTROLLED DOCUMENT.

DIMENSIONS: mm

TOLERANCES UNLESS OTHERWISE SPECIFIED:
0 PLC ±--
1 PLC ±-
2 PLC ±0.20
3 PLC ±-
4 PLC ±-
ANGLES ±1°

MATERIAL 1

FINISH 3

DWN B. HAYMAKER 12AUG99
CHK K. COBLE 12AUG99
APVD K. COBLE 12AUG99
PRODUCT SPEC 108-1836
APPLICATION SPEC 114-13000
WEIGHT -

TE Connectivity

NAME THRU-HOLE, R/A, 0.76Au or 0.69PdNi, HDR, PLASTIC BOARDLOCK, DUAL ROW, MICRO MATE-N-LOK™

SIZE A2 | CAGE CODE 00779 | DRAWING NO C-794620 | RESTRICTED TO -

CUSTOMER DRAWING | SCALE 4:1 | SHEET 1 OF 2 | REV H

794620

1471-9 (3/13)

THIS DRAWING IS UNPUBLISHED. RELEASED FOR PUBLICATION 20
© COPYRIGHT 20 BY - ALL RIGHTS RESERVED.

REVISIONS

P	LTR	DESCRIPTION	DATE	DWN	APVD
	-	SEE SHEET 1	-	-	-

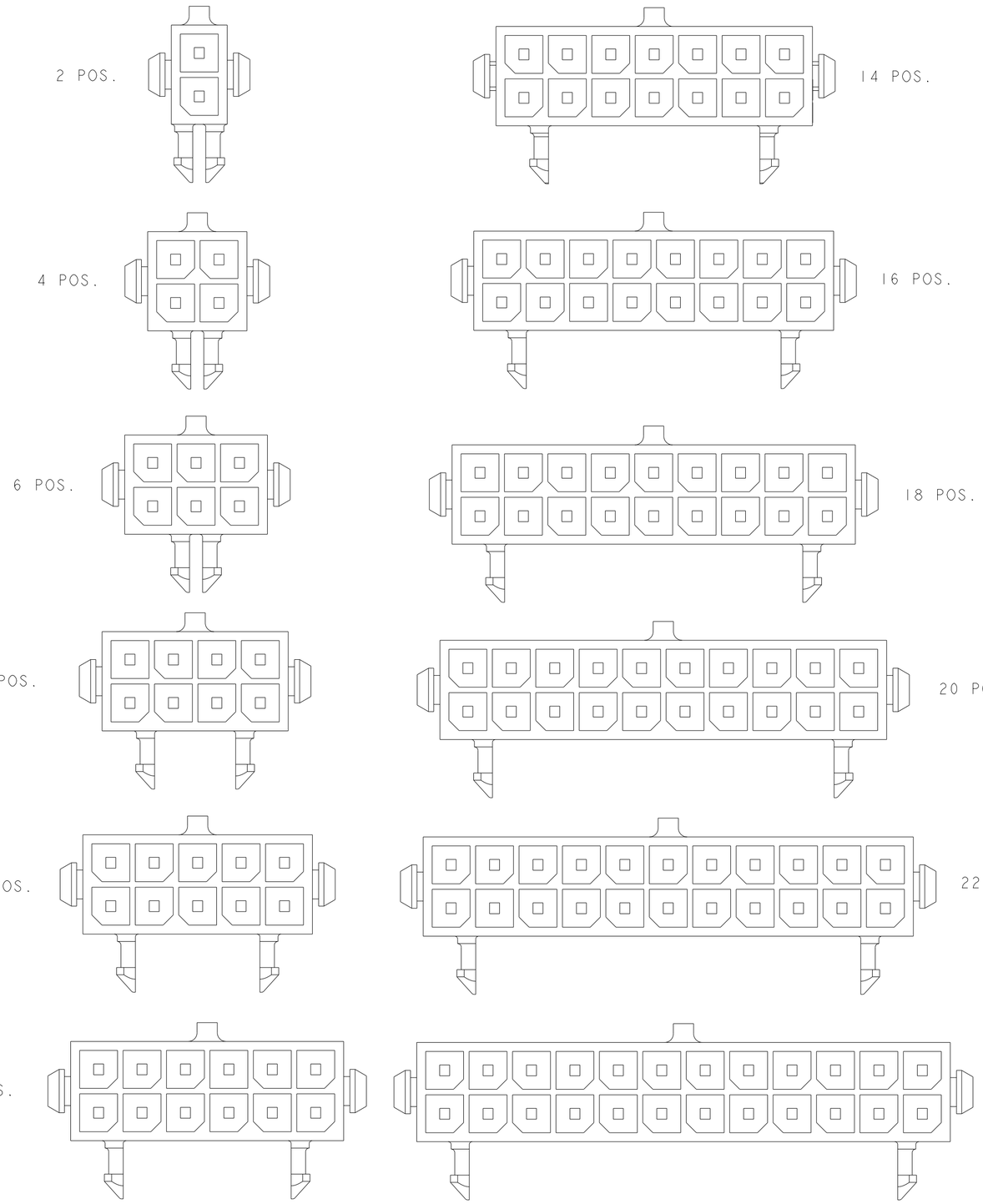

KEYING BY POSITION SIZE

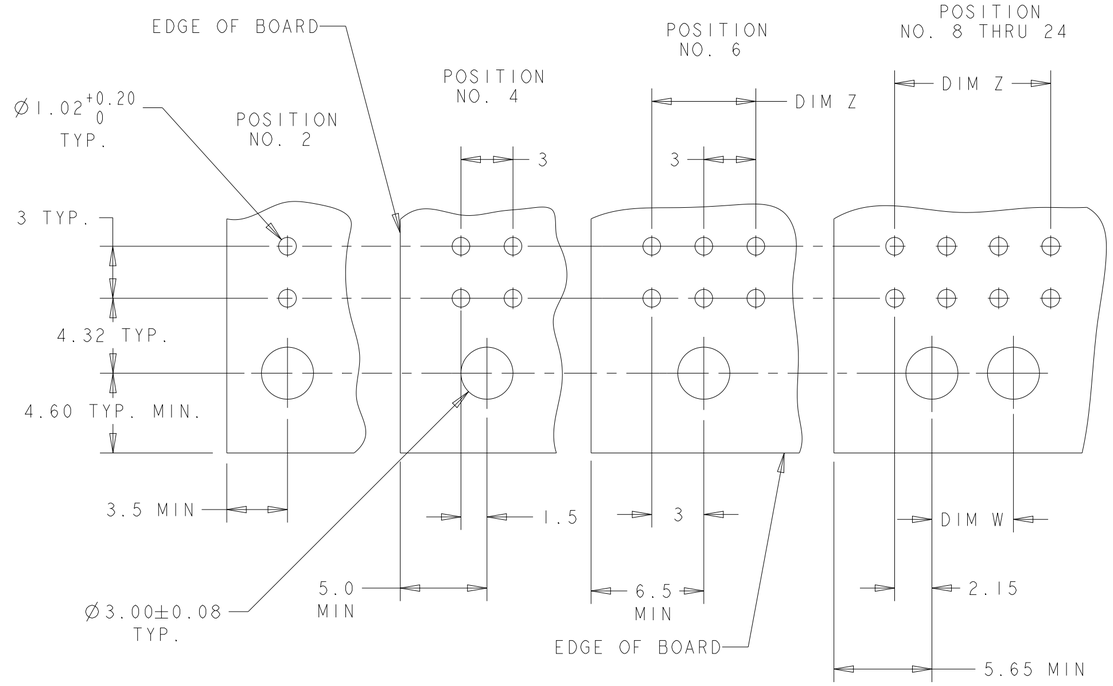

RECOMMENDED PCB LAYOUT (2)
(COMPONENT SIDE)

THIS DRAWING IS A CONTROLLED DOCUMENT.

DIMENSIONS: mm

TOLERANCES UNLESS OTHERWISE SPECIFIED:
0 PLC ±--
1 PLC ±-
2 PLC ±0.20
3 PLC ±-
4 PLC ±-
ANGLES ±1°

MATERIAL

FINISH

DWN B. HAYMAKER 12AUG99
CHK K. COBLE 12AUG99
APVD K. COBLE 12AUG99
PRODUCT SPEC 108-1836
APPLICATION SPEC 114-13000
WEIGHT -

TE Connectivity

NAME THRU-HOLE, R/A, 0.76Au or 0.69PdNi, HDR, PLASTIC BOARDLOCK, DUAL ROW, MICRO MATE-N-LOK

SIZE A2 | CAGE CODE 00779 | DRAWING NO C-794620 | RESTRICTED TO -

CUSTOMER DRAWING | SCALE 4:1 | SHEET 2 OF 2 | REV H