THIS DRAWING IS UNPUBLISHED. RELEASED FOR PUBLICATION -
© COPYRIGHT 20 BY - ALL RIGHTS RESERVED.

LOC	DIST
CM	00

REVISIONS

P	LTR	DESCRIPTION	DATE	DWN	APVD
	D2	REVISED PER ECR-18-006831	12JUN2018	JB	DZ
	D3	ECO-19-006909	03MAY2019	AP	WS
	D4	REVISED PER ECN-22-186748	25NOV2022	WLS	VS
	E	REVISED PER ECN-25-313010	03APR2025	WLS	JP

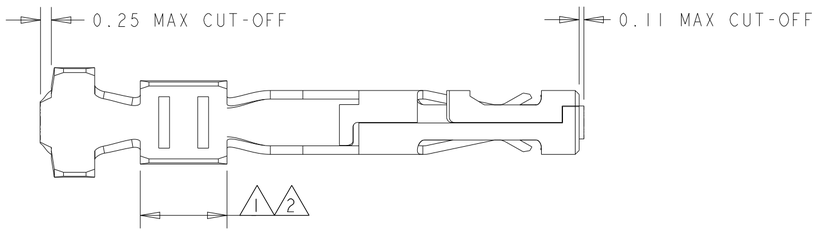

1. BRIGHT TIN IN THE CRIMP AREA, OVER NICKEL PLATE.
   0.76 µm MIN. THK. GOLD STRIPE,
   OR
   0.0762µm MIN. THK. GOLD FLASH OVER 0.69µm MIN. THK. PALLADIUM NICKEL
   IN THE GOLD STRIP AREA PER TE CONNECTIVITY'S DISCRETION,
2. BRIGHT TIN IN THE CRIMP AREA, OVER NICKEL PLATE.
   0.38 µm MIN. THK. GOLD STRIPE,
   OR
   0.0762µm MIN. THK. GOLD FLASH OVER 0.31µm MIN. THK. PALLADIUM NICKEL
   IN THE GOLD PLATE AREA PER TE CONNECTIVITY'S DISCRETION,
3. 1.5 - 4.0 µm THK. BRIGHT TIN.
4. WIRE RANGE: 20 - 24 AWG.
5. INSULATION RANGE: 0.89 - 1.524 mm.

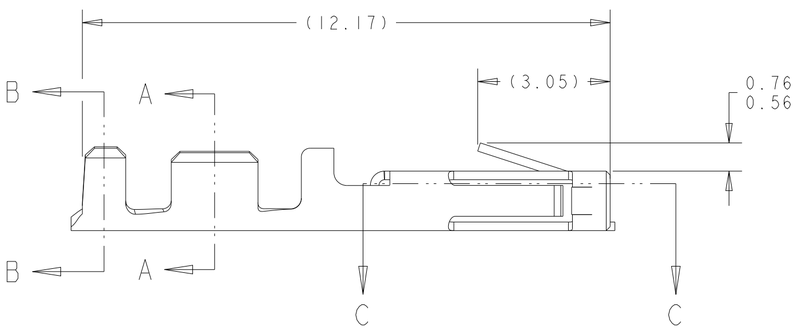

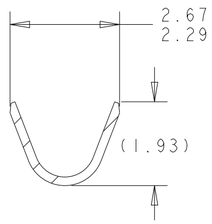

SECTION B-B

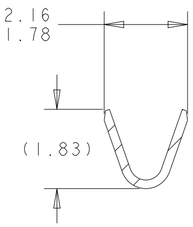

SECTION A-A

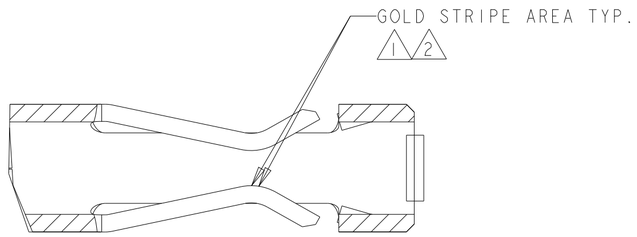

SECTION C-C
SCALE 20:1

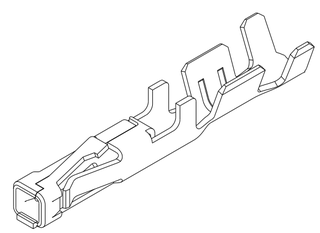

SCALE 7:1

1-794606-2	1	1-794610-2
1-794606-1	2	1-794610-1
794606-1	3	794610-1
REELED PN	FINISH	PART NUMBER

THIS DRAWING IS A CONTROLLED DOCUMENT.

DIMENSIONS: mm

TOLERANCES UNLESS OTHERWISE SPECIFIED:
0 PLC ±-
1 PLC ±-
2 PLC ±0.20
3 PLC ±-
4 PLC ±-
ANGLES ±1°

MATERIAL: 0.2 PH BRZ

FINISH: SEE TABLE

DWN 19-OCT-1999 K. WHITAKER
CHK 19-OCT-1999 K. COBLE
APVD 19-OCT-1999 K. COBLE
PRODUCT SPEC 108-1836
APPLICATION SPEC 114-13000
WEIGHT -

TE Connectivity

NAME: CONTACT, RECEPTACLE, CRIMP, SNAP-IN, LOOSE PIECE, MICRO MATE-N-LOK(TM)

SIZE A2 | CAGE CODE 00779 | DRAWING NO C-794610 | RESTRICTED TO -

CUSTOMER DRAWING | SCALE 10:1 | SHEET 1 OF 1 | REV E

794610

1471-9 (3/11)