THIS DRAWING IS UNPUBLISHED. RELEASED FOR PUBLICATION -
© COPYRIGHT 20 BY - ALL RIGHTS RESERVED.

LOC	DIST
CM	53

REVISIONS

P	LTR	DESCRIPTION	DATE	DWN	APVD
	F2	REVISED PER ECR-18-006831	12JUN2018	JB	DZ
	F3	ECO-19-006909	03MAY2019	AP	WS
	F4	REVISED PER ECN-22-186748	25NOV2022	WLS	VS
	J	REVISED PER ECN-25-313010	01APR2025	WLS	JP

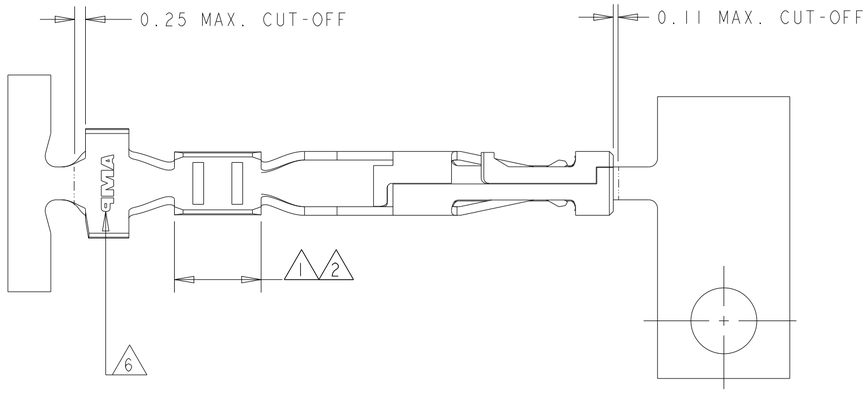

1. BRIGHT TIN IN THE CRIMP AREA, OVER NICKEL PLATE,
   0.76µm MIN. THK. GOLD STRIPE,
   OR
   0.0762µm MIN. THK. GOLD FLASH OVER 0.69µm MIN. THK. PALLADIUM NICKEL
   IN THE GOLD STRIPE AREA PER TE CONNECTIVITY'S DISCRETION.
2. BRIGHT TIN IN THE CRIMP AREA, OVER NICKEL PLATE,
   0.38µm MIN. THK. GOLD STRIPE,
   OR
   0.0762µm MIN. THK. GOLD FLASH OVER 0.31µm MIN. THK. PALLADIUM NICKEL
   IN THE GOLD STRIPE AREA PER TE CONNECTIVITY'S DISCRETION.
3. 1.5 - 4.0µm THK. BRIGHT TIN.
4. WIRE RANGE: 26 - 30 AWG.
5. INSULATION RANGE: 0.89 - 1.524 mm.
6. AMP LOGO LOCATED APPROXIMATELY AS SHOWN.

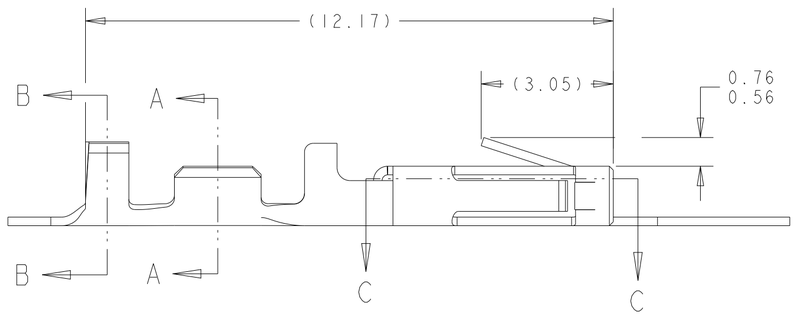

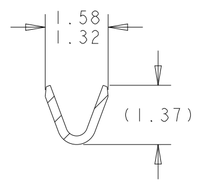

SECTION A-A

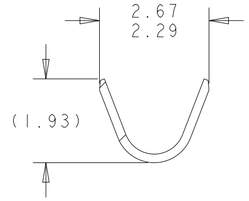

SECTION B-B

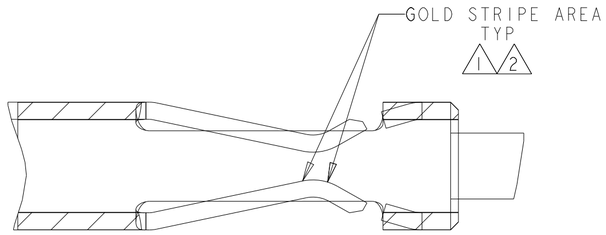

SECTION C-C
SCALE 20:1

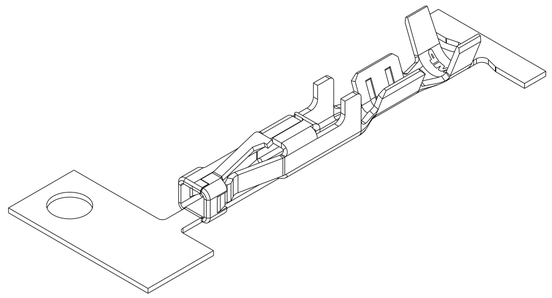

SCALE 7:1

1	1-794607-2
2	1-794607-1
3	794607-1
FINISH	PART NUMBER

THIS DRAWING IS A CONTROLLED DOCUMENT.

DIMENSIONS: mm

TOLERANCES UNLESS OTHERWISE SPECIFIED:
0 PLC ±-
1 PLC ±-
2 PLC ±0.20
3 PLC ±-
4 PLC ±-
ANGLES ±1°

MATERIAL: 0.2 PH BRZ
FINISH: SEE TABLE

METRIC

DWN 12-OCT-1999 K. WHITAKER
CHK 12-OCT-1999 K. COBLE
APVD 12-OCT-1999 K. COBLE
PRODUCT SPEC 108-1836
APPLICATION SPEC 114-13000
WEIGHT -

TE Connectivity

NAME: CONTACT, RECEPTACLE, CRIMP SNAP-IN, MICRO MATE-N-LOK(TM)

SIZE A2 | CAGE CODE 00779 | DRAWING NO C-794607 | RESTRICTED TO -

CUSTOMER DRAWING | SCALE 10:1 | SHEET 1 OF 1 | REV J

794607

1471-9 (3/11)