© – TE Connectivity. All Rights Reserved.

REVISIONS					
P	LTR	DESCRIPTION	DATE	DWN	APVD
	D1	REVISED PER ECR-24-196907	25SEP2024	MV	JP

1. PINS TO COMPLY WITH AMP SOLDERABILITY SPEC 109-11-3.
2. MATES WITH PLUG P/N 770586-1.
3. COORDINATE DIMENSION APPLIES FROM CENTER OF ACTUAL FEATURE.
4. RECOMMENDED FOR EDGE MOUNTING.
5. 0.00381 MIN MATTE TIN LEAD PLATE OVER 0.00127 MIN NICKEL.
6. 0.00076 MIN GOLD PLATE IN THE LOCALIZED GOLD PLATE AREA, 0.00381 MATTE TIN LEAD IN THE LOCALIZED PLATE AREA, BOTH OVER 0.00127 MIN NICKEL.
7. 0.00381 MIN MATTE TIN PLATE OVER 0.00127 MIN NICKEL.
8. 0.00076 MIN GOLD PLATE IN THE LOCALIZED GOLD PLATE AREA, 0.00381 MIN MATTE TIN IN THE LOCALIZED TIN PLATE AREA, BOTH OVER 0.00127 MIN NICKEL.

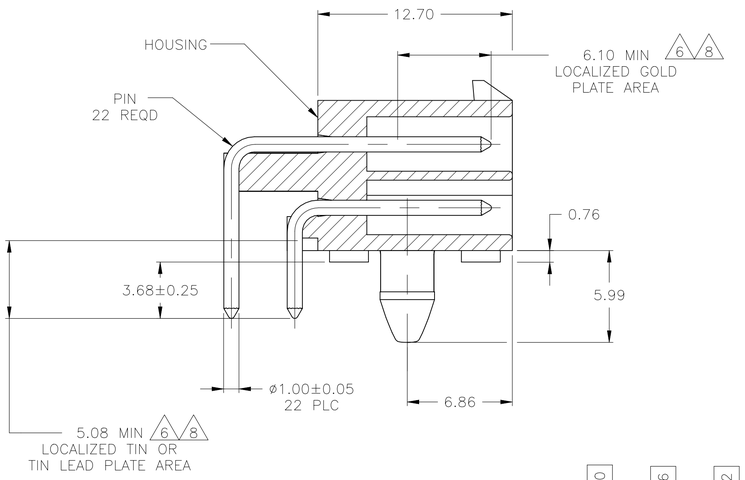

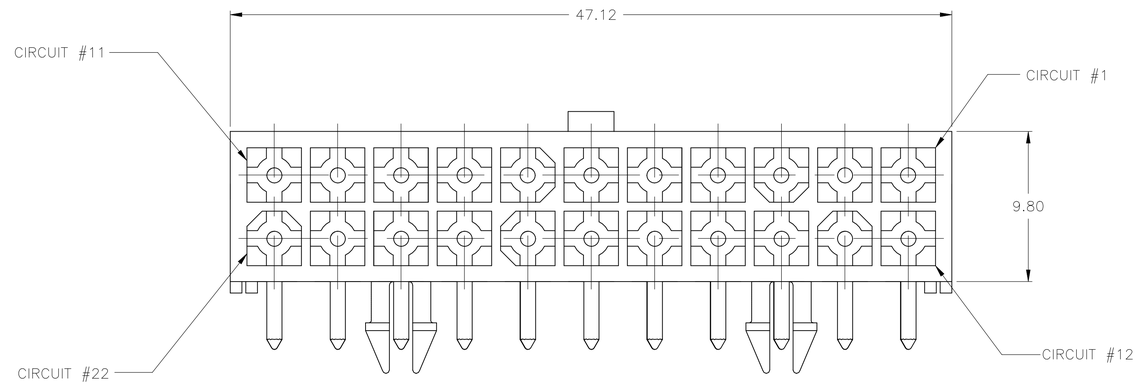

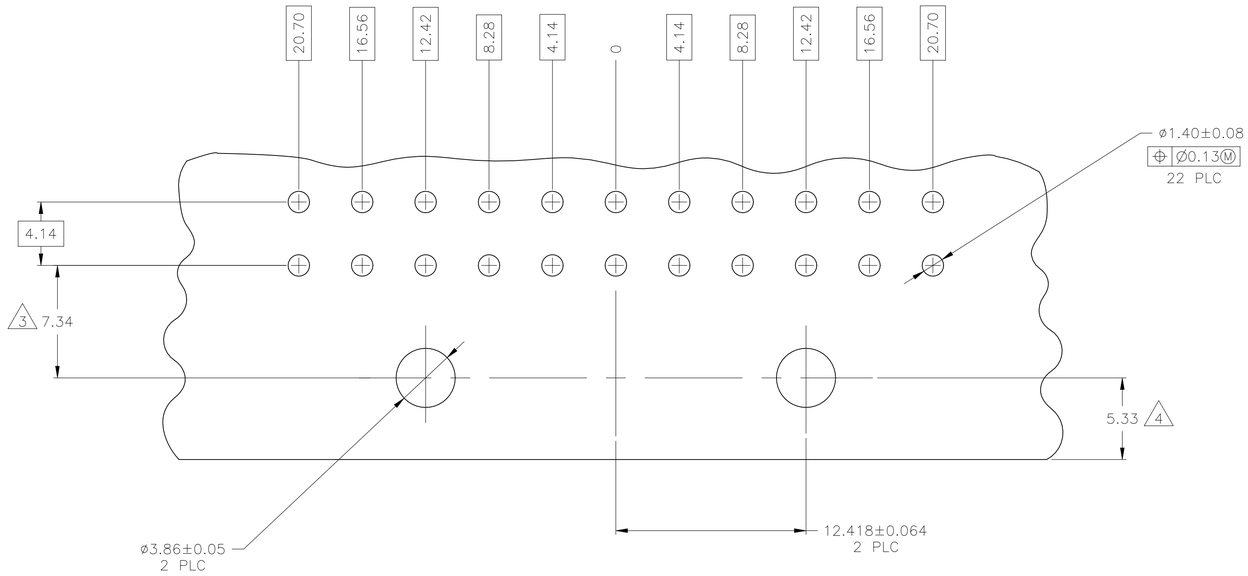

RECOMMENDED MOUNTING HOLE PATTERN
FOR 1.57 THICK P.C. BOARD

	PIN MATERIAL	PIN FINISH	HOUSING MATERIAL	HOUSING COLOR	PART NO
	BRASS	8	NYLON, UL94V-0	WHITE	1-794107-1
	BRASS	7	NYLON, UL94V-0	WHITE	1-794107-0
OBSOLETE	BRASS	GOLD 6	NYLON, UL94V-0	WHITE	~~794107-2~~
SUPERSEDE WITH 1-794107-0	BRASS	TIN LEAD 5	NYLON, UL94V-0	WHITE	~~794107-1~~

MM	IN	MM	IN	MM	IN
1.00	.039	6.86	.270	–	–
0.76	.030	6.10	.240	47.12	1.855
0.25	.010	5.99	.236	20.70	.815
0.13	.005	5.33	.210	16.56	.652
0.08	.003	5.08	.200	12.70	.500
0.064	.0025	4.14	.163	12.42	.489
0.05	.002	3.86	.152	12.418	.4889
0.00381	.000150	3.68	.145	9.80	.386
0.00127	.000050	1.57	.062	8.28	.326
0.00076	.000030	1.40	.055	7.34	.289

CONVERSION TABLE

THIS DRAWING IS A CONTROLLED DOCUMENT.

DIMENSIONS: mm

TOLERANCES UNLESS OTHERWISE SPECIFIED:
0 PLC ± –
1 PLC ± –
2 PLC ± 0.13
3 PLC ± –
4 PLC ± –
ANGLES ± –

MATERIAL: SEE TABLE
FINISH: SEE TABLE

DWN K. WHITAKER 02APR96
CHK R. SWING 02APR96
APVD R. ORSTAD 02APR96
PRODUCT SPEC —
APPLICATION SPEC —
WEIGHT

TE Connectivity

NAME: HEADER ASSEMBLY,RIGHT ANGLE, W/SHORT PEG,22 CIRCUIT, MINI UNIVERSAL MATE-N-LOK(TM)

SIZE A1 | CAGE CODE 00779 | DRAWING NO C-794107 | RESTRICTED TO —

CUSTOMER DRAWING | SCALE 5:1 | SHEET 1 OF 1 | REV D1

4805 (1/15)