© – TE Connectivity. All Rights Reserved.

REVISIONS					
P	LTR	DESCRIPTION	DATE	DWN	APVD
	F	REVISED PER ECR-24-226486	20NOV2024	TB	JP

1. PINS TO COMPLY WITH AMP SOLDERABILITY SPEC. 108-11-3.

2. 0.00381 MIN MATTE TIN LEAD OVER 0.00127 MIN NICKEL.

3. 0.00076 MIN GOLD PLATE IN THE LOCALIZED PLATE AREA, 0.00381 MATTE TIN LEAD IN THE LOCALIZED PLATE AREA, BOTH OVER 0.00127 MIN NICKEL.

4. 0.00381 MIN MATTE TIN OVER 0.00127 MIN NICKEL.

5. 0.00076 MIN GOLD PLATE IN THE LOCALIZED PLATE AREA, 0.00381 MATTE TIN IN THE LOCALIZED PLATE AREA, BOTH OVER 0.00127 MIN NICKEL.

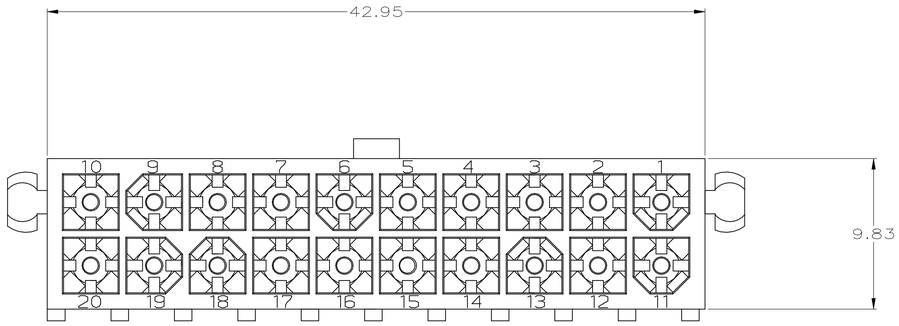

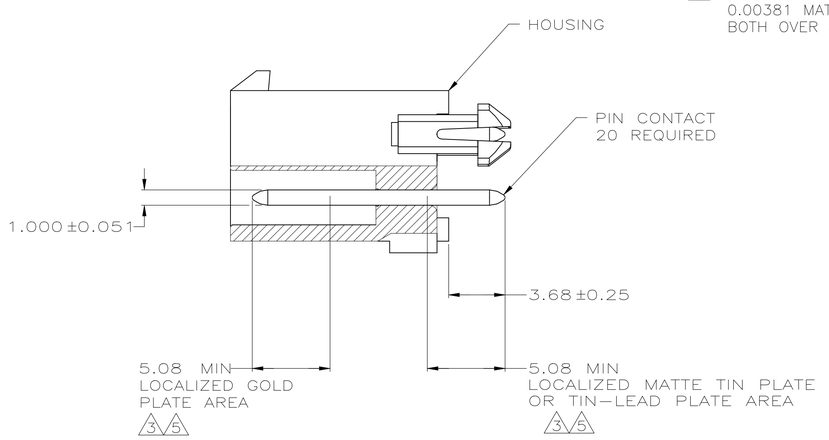

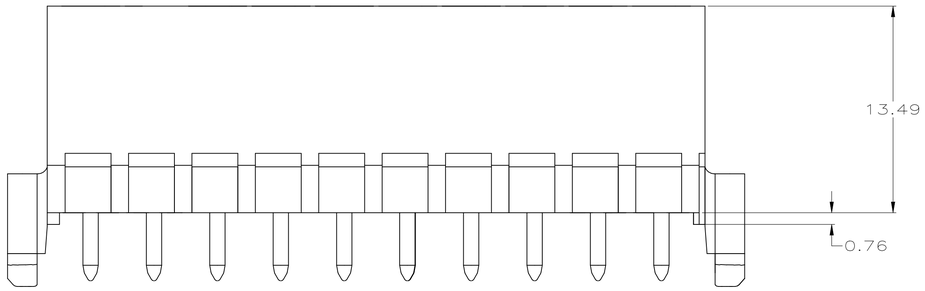

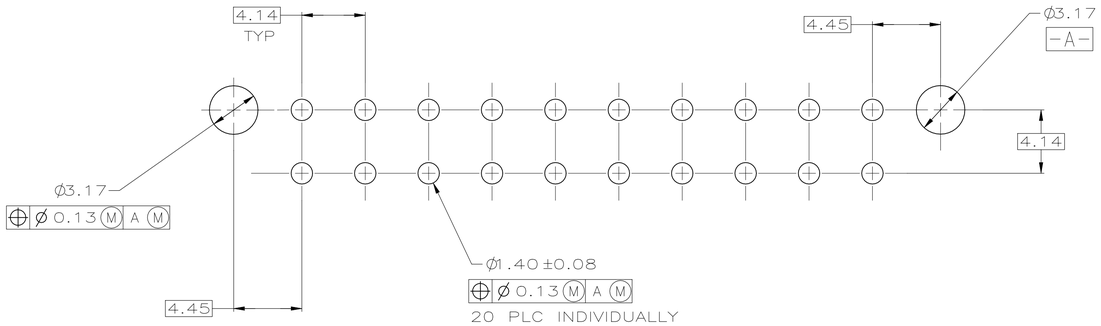

RECOMMENDED MOUNTING HOLE PATTERN
FOR 1.57 THICK P.C. BOARD

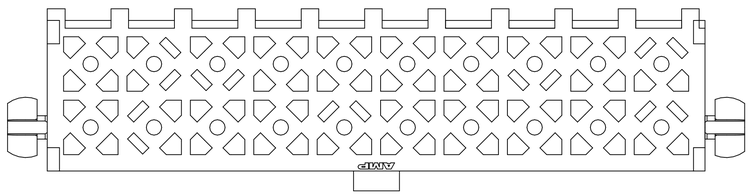

	PIN CONTACT MATERIAL AND FINISH	HOUSING MATERIAL AND COLOR	PART NUMBER
	BRASS, GOLD 5	NYLON, 94V-0, WHITE	1-794070-1
	BRASS, TIN 4	NYLON, 94V-0, WHITE	1-794070-0
SUPERSEDE WITH 1-794070-1	BRASS, GOLD 3	NYLON, 94V-0, WHITE	~~794070-2~~
OBSOLETE	BRASS, TIN LEAD 2	NYLON, 94V-0, WHITE	~~794070-1~~

THIS DRAWING IS A CONTROLLED DOCUMENT.

DIMENSIONS: mm

TOLERANCES, UNLESS OTHERWISE SPECIFIED:
0 PLC ± –
1 PLC ± –
2 PLC ± 0.13
3 PLC ± –
4 PLC ± –
ANGLES ± –

MATERIAL: SEE TABLE

FINISH: SEE TABLE

DWN K. WHITAKER 6-12-95
CHK R. SWING 6-12-95
APVD R. ORSTAD 6-13-95
PRODUCT SPEC –
APPLICATION SPEC –
WEIGHT

TE Connectivity

NAME: HEADER ASSEMBLY, 20 CIRCUIT, DOUBLE ROW VERTICAL, MINI-UNIVERSAL MATE-N-LOK

SIZE	CAGE CODE	DRAWING NO	RESTRICTED TO
A1	00779	C-794070	–

CUSTOMER DRAWING | SCALE 5:1 | SHEET 1 OF 1 | REV F

4805 (1/15)