© – TE Connectivity. All Rights Reserved.

REVISIONS					
P	LTR	DESCRIPTION	DATE	DWN	APVD
	K	REVISED PER ECR-24-226486	20NOV2024	TB	JP

1. PINS TO COMPLY WITH AMP SOLDERABILITY SPEC 109-11-3.

2. 0.00076 MIN GOLD PLATE IN THE LOCALIZED PLATE AREA, 0.00381 MATTE TIN LEAD IN THE LOCALIZED PLATE AREA, BOTH OVER 0.00127 MIN NICKEL.

3. 0.00381 MIN MATTE TIN LEAD OVER 0.00127 MIN NICKEL.

4. 0.00381 MIN MATTE TIN OVER 0.00127 MIN NICKEL.

5. 0.00076 MIN GOLD PLATE IN THE LOCALIZED PLATE AREA, 0.00381 MATTE TIN IN THE LOCALIZED PLATE AREA, BOTH OVER 0.00127 MIN NICKEL.

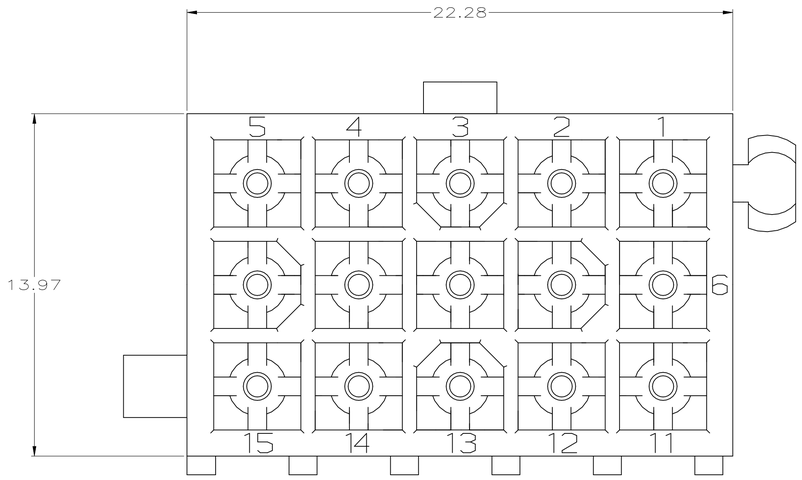

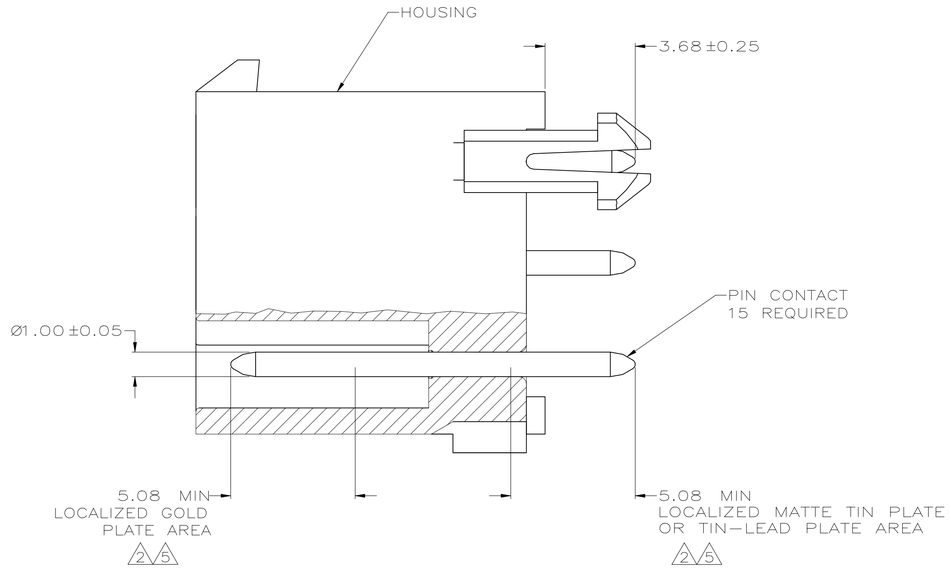

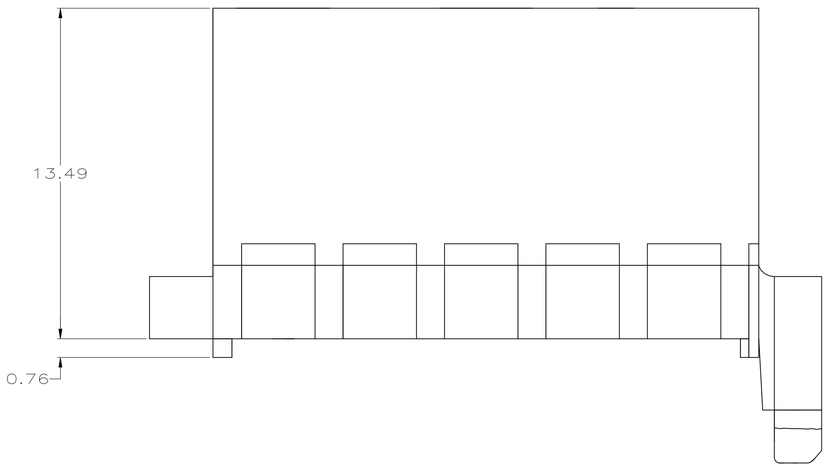

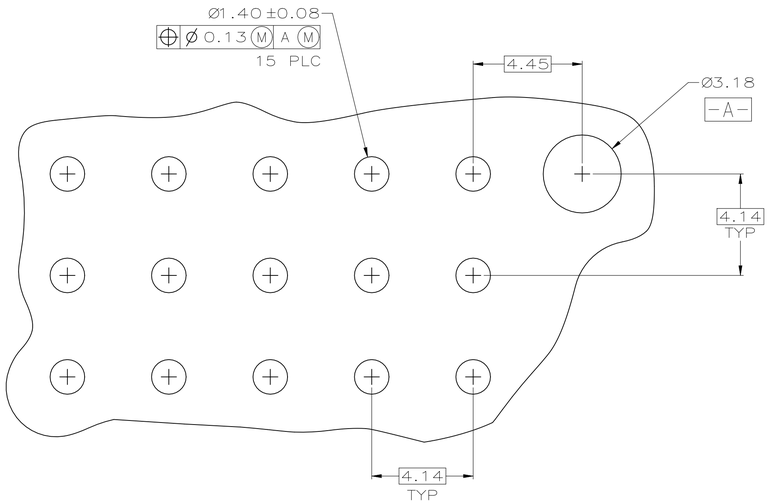

RECOMMENDED MOUNTING HOLE PATTERN
FOR 1.57 THICK P.C. BOARD

	PIN MATERIAL	PIN FINISH	HOUSING MATERIAL	HOUSING COLOR	PART NO.
	BRASS, GOLD	5	NYLON, UL94V-0	WHITE	1-770859-1
	BRASS, TIN	4	NYLON, UL94V-0	WHITE	1-770859-0
OBSOLETE	BRASS, GOLD	2	NYLON, UL94V-0	WHITE	~~770859-2~~
	BRASS, TIN-LEAD	3	NYLON, UL94V-0	WHITE	~~770859-1~~

THIS DRAWING IS A CONTROLLED DOCUMENT.

DIMENSIONS: mm

TOLERANCES UNLESS OTHERWISE SPECIFIED:
0 PLC ± –
1 PLC ± –
2 PLC ± 0.13
3 PLC ± –
4 PLC ± –
ANGLES ± –

MATERIAL –
FINISH –

DWN S CARPENTER 08JUN05
CHK R JONES 29JUL2003
APVD R JONES 29JUL2003
PRODUCT SPEC —
APPLICATION SPEC —
WEIGHT —

TE Connectivity

NAME
HEADER ASSEMBLY, 15 CKT,
DOUBLE ROW VERTICAL
MINI UNIVERSAL MATE-N-LOK

SIZE	CAGE CODE	DRAWING NO	RESTRICTED TO
A1	00779	C-770859	—

CUSTOMER DRAWING

SCALE	SHEET	OF	REV
8:1	1	1	K

4805 (1/15)