DRAWING MADE IN THIRD ANGLE PROJECTION

THIS DRAWING IS UNPUBLISHED. RELEASED FOR PUBLICATION 19

© COPYRIGHT 19 BY AMP INCORPORATED, HARRISBURG, PA. ALL INTERNATIONAL RIGHTS RESERVED. AMP PRODUCTS MAY BE COVERED BY U.S. AND FOREIGN PATENTS AND/OR PATENTS PENDING.

LOC CM DIST 53

REVISIONS

P	F	ZONE	LTR	DESCRIPTION	DATE	APPROVED
✓			C	REV PER ECN CM-3500	9-2-91	MG RS
✓			D	REV PER ECN CM-3560	11-8-91	DS RS
✓			E	REV PER ECN CM-3751	4-15-92	MG RS
			E1	REVISED PER ECR-21-117185	20OCT2021	PJ VS

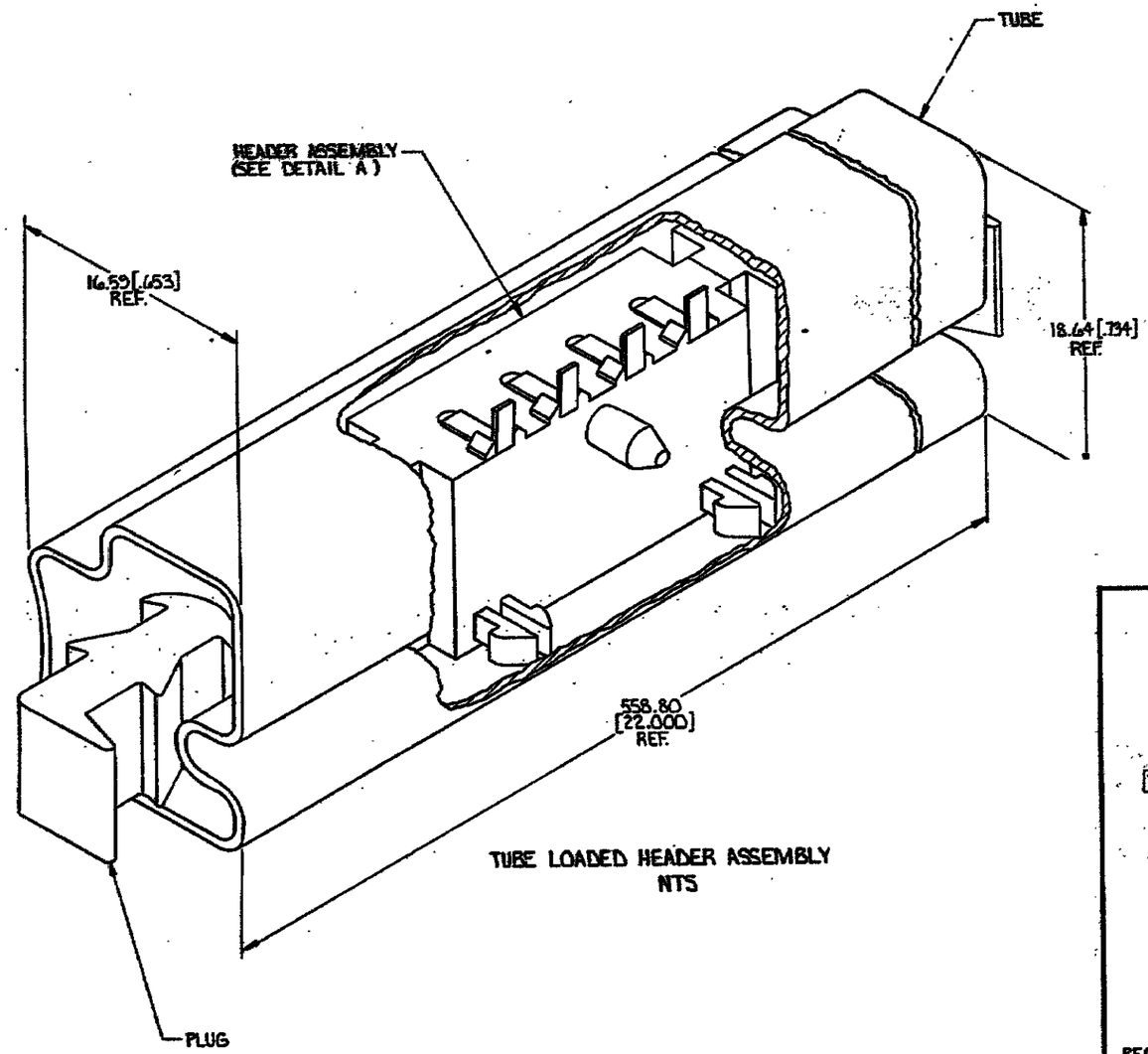

TUBE LOADED HEADER ASSEMBLY
NTS

1. PARTS COMPLY WITH AMP SPEC. 109-11-3.

2. MATERIAL: HOUSING-NYLON, UL94V-2 (BLACK) 100% VIRGIN (NO REGRIND) CONTACT-COPPER ALLOY, PRE-TIN PLATED.

3. DIMENSIONS IN BRACKETS ARE IN INCHES.

4. 0.25 [.010] MIN THICK SOLDER PASTE, 63/27 TIN-LEAD.

5. DIMENSION SHOWN REPRESENT PRODUCT IN DRY CONDITION. ADDITIONAL 2% GROWTH DUE TO END USE LOCATION MOISTURE ABSORPTION MAY OCCUR AND SHOULD BE ACCOUNTED FOR.

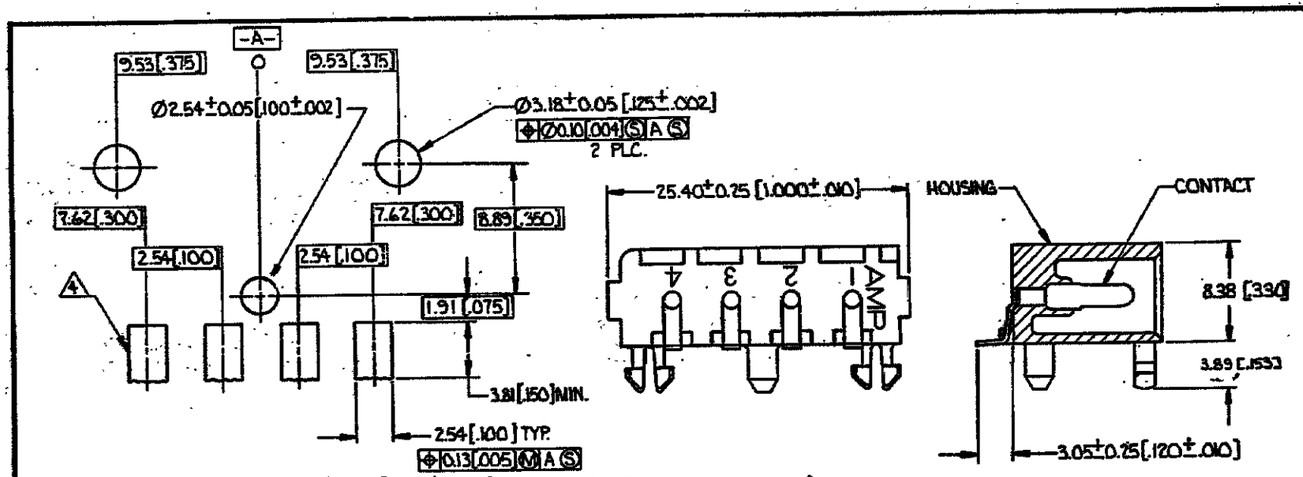

RECOMMENDED LAYOUT FOR 1.57±0.15 [.062±.006] THICK P.C. BOARD

DETAIL A

20	2	4	770829 -1
HEADER ASSEMBLY	PLUG	NUMBER OF POSITIONS	PART NUMBER
QTY PER TUBE		HEADER ASSEMBLY	

METRIC

PART NO

UNLESS OTHERWISE SPECIFIED DIMENSIONS ARE IN mm
TOLERANCES ON:
DECIMALS ±0.13 [.005]
ANGLES ±

MATERIAL 2

FINISH 2

CONTRACT NO

DR P. Collins 3-14-91

CHK 3-15-91

APPD 3-18-91

MFG APPD

DSGN APPD

OTHER APPD

TE Connectivity

NAME

HEADER ASSEMBLY, RIGHT ANGLE, 4 CIRCUIT, TUBE LOADED, COMMERCIAL MATE-N-LOK

SIZE	FSCM NO	DRAWING NO
D	00779	770829

SCALE 4:1 SHEET 1 OF 1

CUSTOMER DRAWING