EX

699-8084-XX

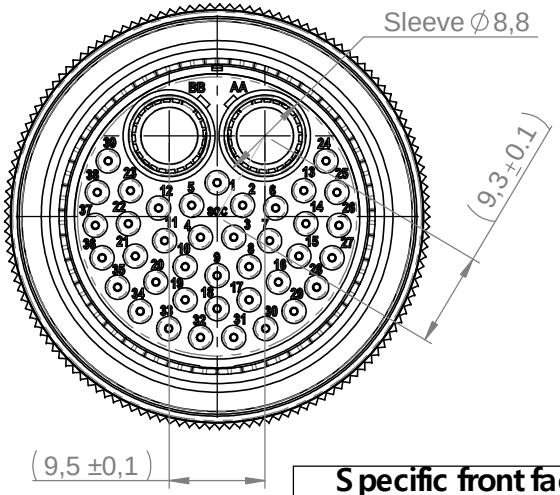

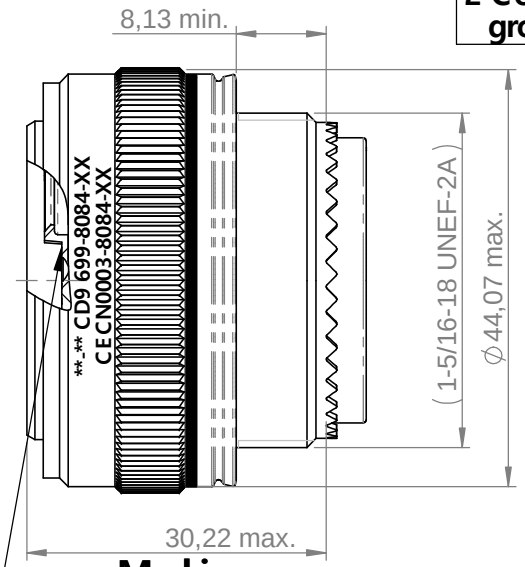

2 Contacts Quadrax #08 grounded to the shell

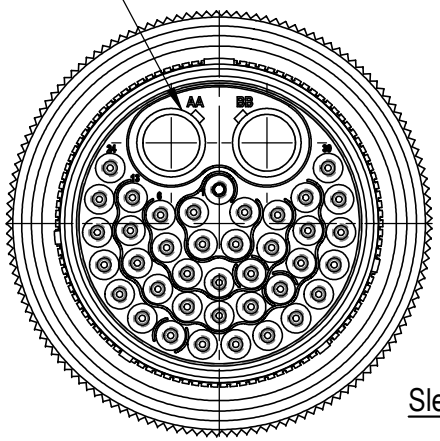

Specific front face interfaces (2 plans)

Marking :

Year — Week

****-** CD9 699-8084-XX**

CECN0003-8084-XX — Keying

Sleeve

View contacts showned

Mass of contacts with sleeves	27g ±10%
Mass of connector alone	100g ±10%
Total mass	127g ±10%

Connector issued from EN2997 except temperature limited to 150 °C
To be mounted with accessory reference 699-8087-22

Connector delivered with contacts and sleeves
Connector alone (without contacts) : refer to 699-8092-XX data sheet

Equivalence		Keying
TE-DEUTSCH Part number	COMAC Part number	
699-8084-00	CECN0003-8084-00	N
699-8084-06	CECN0003-8084-06	6
699-8084-07	CECN0003-8084-07	7
699-8084-08	CECN0003-8084-08	8
699-8084-09	CECN0003-8084-09	9

Contact P/N	Type	Contact Size	Nr of cavities	Sleeve	Cable eligible	TE-DEUTSCH Kit contact P/N
EN3155-019F2020	S	20	39	/	/	006-0912-20
187-0323-08	S	Quadrax #08	2	182-0601-08	Tensolite NF24Q100	182-4066-08

Revision	Date	Observations
d	07/09/15	Update OE090915
c	06/01/15	Update OE111214

ORIGINE : / *ORIGIN :* DE053/11

SERIE 983 Class S / EN2997 Style

DATE 15/07/2013

VISA Creation *Created*

VISA Approbation *Approval*

DESIGNATION **Sealed Plug**

REF : / *P/N:* **699-8084-XX**

VERSION -

REVISION -

Connecteurs Electriques Deutsch

17, rue LAVOISIER - BP 117 - 27091 EVREUX CEDEX 09 - FRANCE

FICHE TECHNIQUE
TECHNICAL DATA SHEET

204-19-C/I01

Ce document est la propriété de CED et ne peut être reproduit ou communiqué sans son autorisation *This document is the property of CED and cannot be reproduced or disclosed without the CED approval*