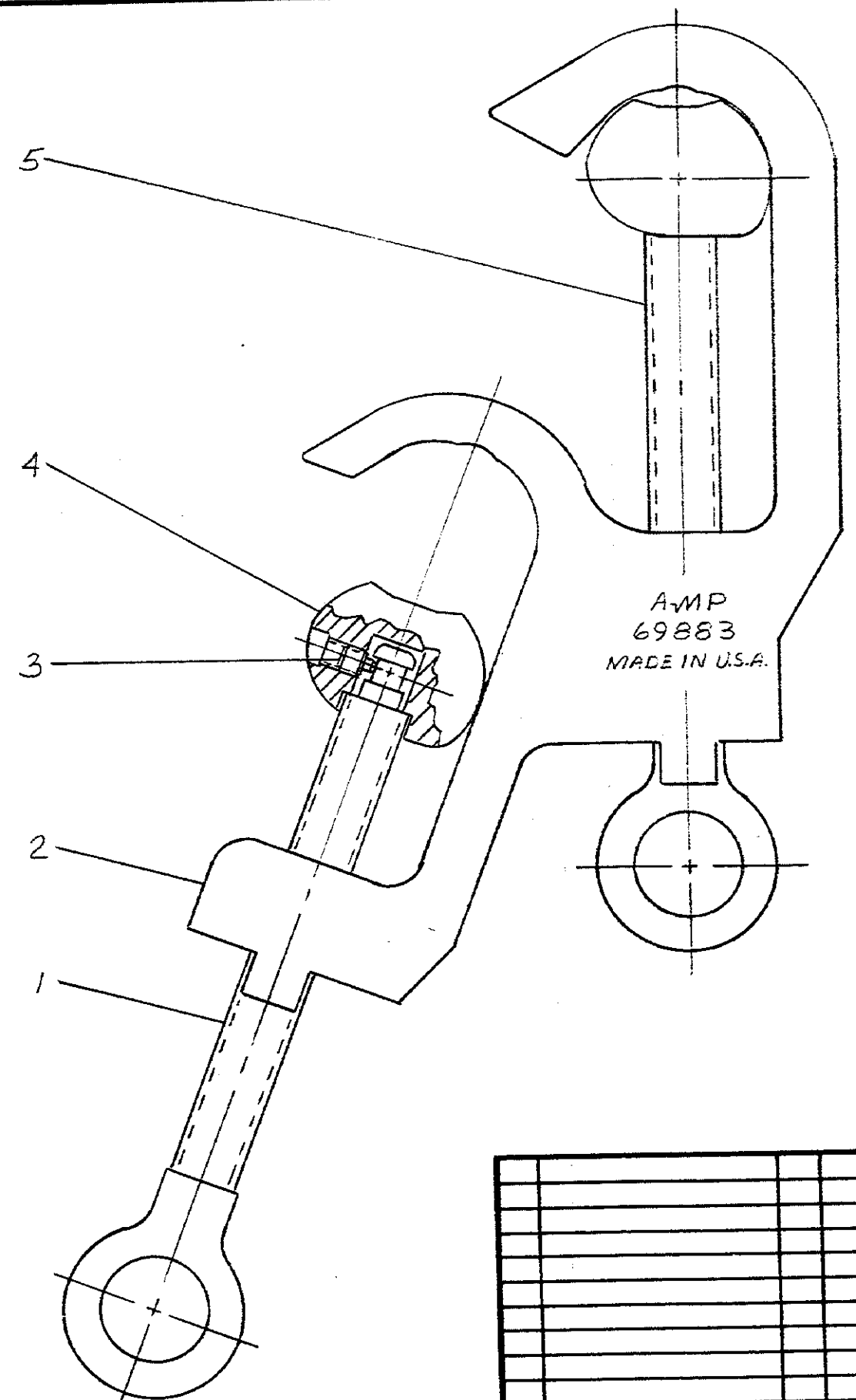

2	306946-3	EYE BOLT	5
2	307157-1	INDENTER-MACHINED	4
2	4-21059-1	SCREW-SET (HALF DOG POINT 10-32×.250 LG.)	3
1	307159-1	HOUSING-MACHINED	2
1	306946-1	EYE BOLT	1

NUMBER	NAME	REMARKS	ITEM NO

LTR	REVISION RECORD	DR	CHK	DATE

NUMBER 69883

REQUIRED PER ASSEMBLY

DESCRIPTION

©1968 BY AMP INCORPORATED. ALL RIGHTS RESERVED.
AMP PRODUCTS COVERED BY PATENTS AND/OR PATENTS PENDING.

CUSTOMER COPY REFERENCE ONLY

DR A. J. Kaprik 11-15-68

CHK E. J. Link 11-15-68

D E. J. Link 11-18-68

MATERIAL AND FINISH —"—

WIRE — RANGE — INSULATION 1,033.5 MCM —"—

TOLERANCE EXCEPT AS NOTED ± .015 ± 1° 0'

SCALE 1~1

AMP INCORPORATED HARRISBURG, PENNA.

CLASS —"—

TYPE —"—

LOC M B NO 69883 REV 0

NAME PIGGY BACK CLAMP ASSEMBLY

DIMENSIONS IN INCHES. DO NOT SCALE PRINT

PRINT DIST 0 3

AMP 1253 REV 7/68