THIS DRAWING IS UNPUBLISHED. RELEASED FOR PUBLICATION ,2006.
© COPYRIGHT 2006 BY TYCO ELECTRONICS CORPORATION. ALL RIGHTS RESERVED.

LOC	DIST
J	

REVISIONS 変更

P	LTR	DESCRIPTION	DATE	DWN	APVD
	A	RELEASED	10AUG06	T.T	Y.Y

−1:AS SHOWN(本図)

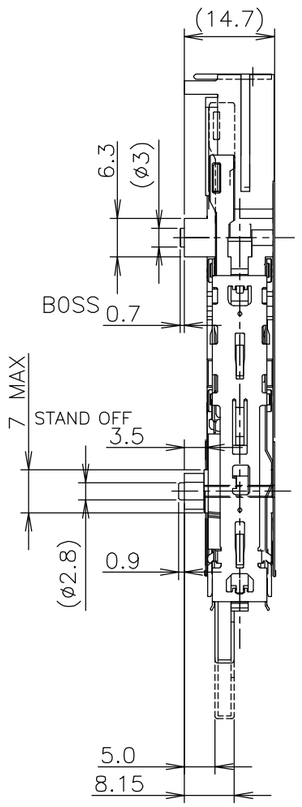

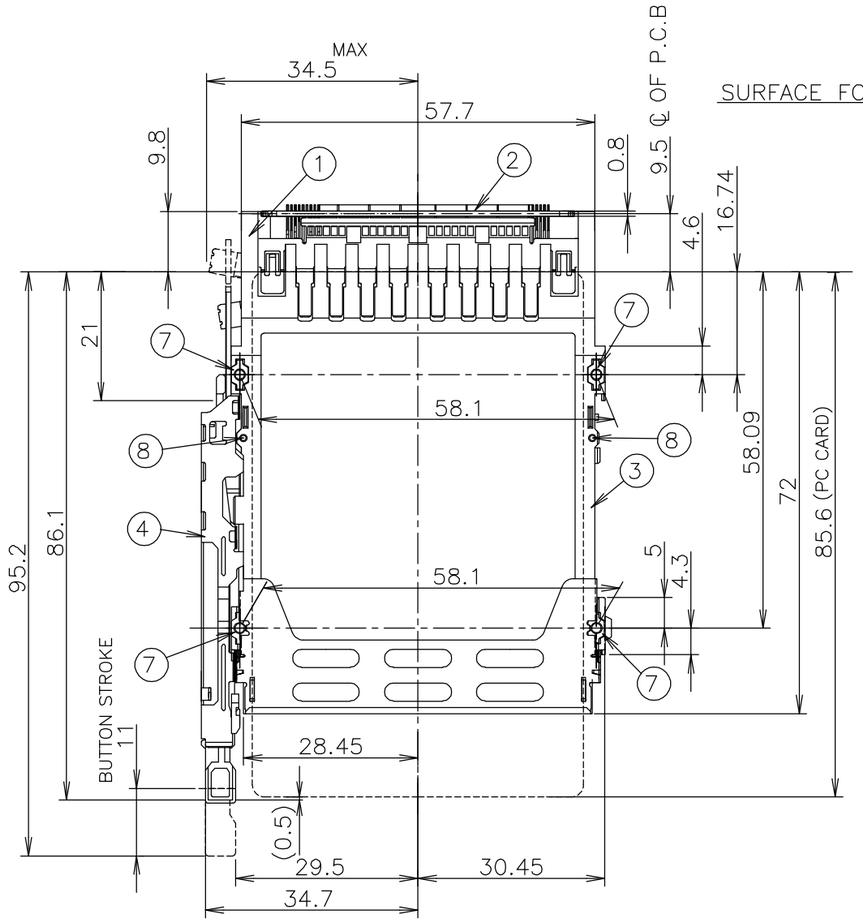

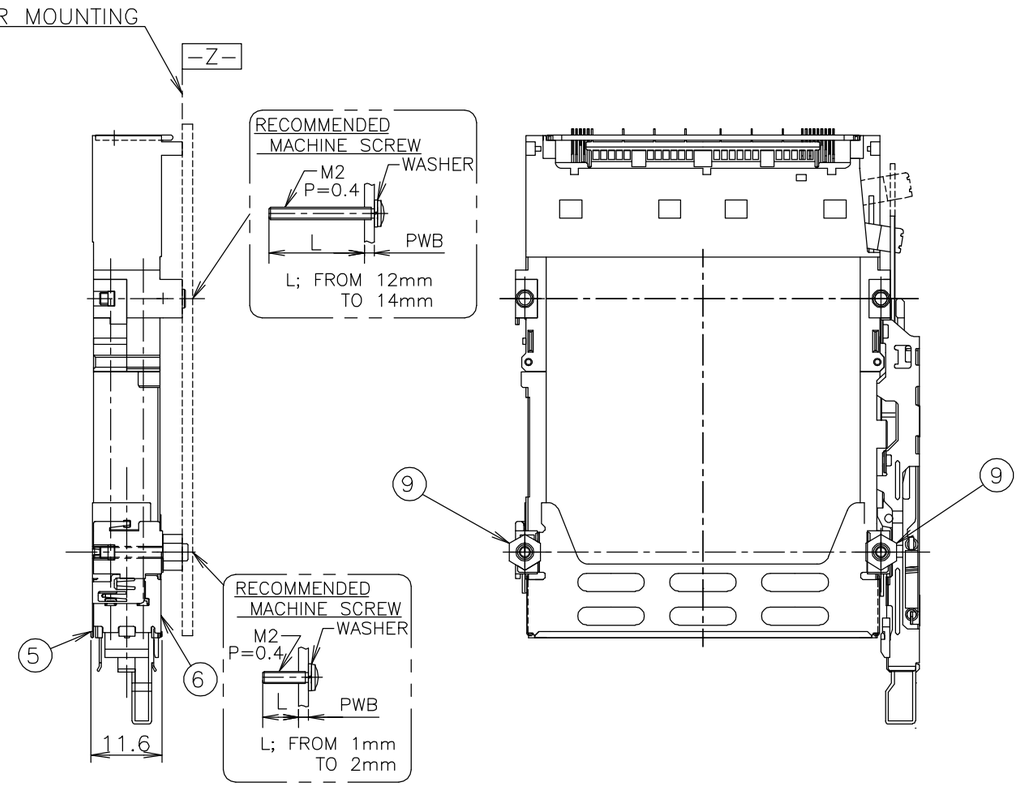

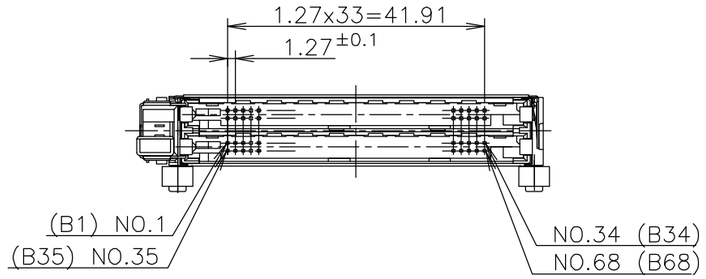

QTY	NAME	ITEM NO.
2	SET SCREW	9
2	SPRING PIN	8
4	NUT (M2)	7
1	FRAME BELT (LOWER)	6
1	FRAME BELT (UPPER)	5
1	PUSH PUSH SUB ASSY(TOP,LEFT)	4
1	HSG ARM (TOP,RIGHT)	3
1	PWB (TOP MOUNT)	2
1	HEADER ASSEMBLY (TOP,LEFT)	1

△1 ポスト長は、表1を参照のこと。
2 推奨ネジ締め付けトルク: 0.15Nm(1.5kgcm)から0.2Nm(2kgcm)
3 適応PCカード; PCMCIA準拠のPCカード

△1 REFER TO TABLE 1 FOR POST CONTACT LENGTH.
2 RECOMMENDED TIGHTENING TORUQUE
: FROM 0.15Nm(1.5kgcm) TO 0.2Nm(2kgcm)
3 APPLIED CARD: PCMCIA ATTRIBUTE PC CARD.

THIS DRAWING IS A CONTROLLED DOCUMENT.

DIMENSIONS: 単位: 耗 mm

TOLERANCES UNLESS OTHERWISE SPECIFIED: 一般公差

0 PLC	± 0.5
1 PLC	± 0.5
2 PLC	± 0.5
~~3 PLC~~	~~± –~~
~~4 PLC~~	~~± –~~
~~ANGLES~~	~~± –~~

MATERIAL 材料

FINISH 仕上

DWN	T.TSUZAKI	10AUG06
CHK	T.FUTATSUGI	10AUG06
APVD	Y.YAMAMOTO	10AUG06
PRODUCT SPEC 製品規格	108−78192	
APPLICATION SPEC 取付適用規格		
WEIGHT	28g	

tyco Electronics

Tyco Electronics AMP K.K.
Kawasaki, Japan

NAME 名称
CARD BUS 3.5mmH
DOUBLE SLOT TOP MOUNT PUSH−PUSH TYPE

SIZE	CAGE CODE	DRAWING NO 番号	RESTRICTED TO
A3	00779	C−6565126	

CUSTOMER DRAWING

SCALE 尺度	SHEET	REV
1:1	1 OF 2	A

AMP 1470−19 REV 31MAR2000

L:\EN22_PE_CAD\FJ014986_Tsuzaki\Pb−free\C−6565126.dwg

THIS DRAWING IS UNPUBLISHED. RELEASED FOR PUBLICATION ,2001.
© COPYRIGHT 2001 BY TYCO ELECTRONICS CORPORATION. ALL RIGHTS RESERVED.

LOC J DIST

REVISIONS 変更

P	LTR	DESCRIPTION	DATE	DWN	APVD
	—	SEE SHEET 1	–	—	—

0.6mm PITCH CARD EDGE CONNECTOR FOR THIS CARDBUS PRODUCTS

PARTS NUMBER	DESCRIPTION
6123215-1	HARD TRAY ASSY
6376045-1	ON TAPING(EMBOSS)

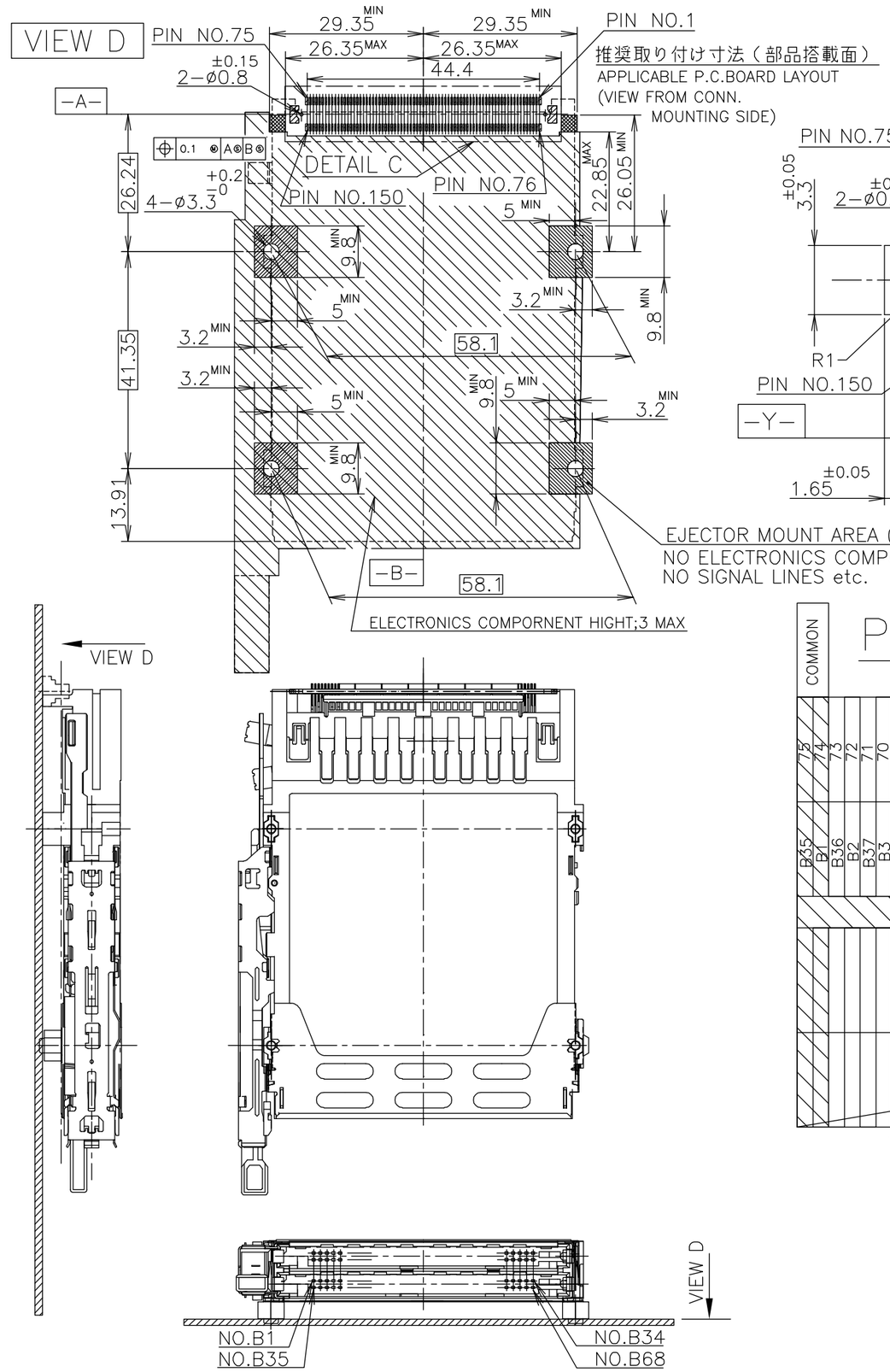

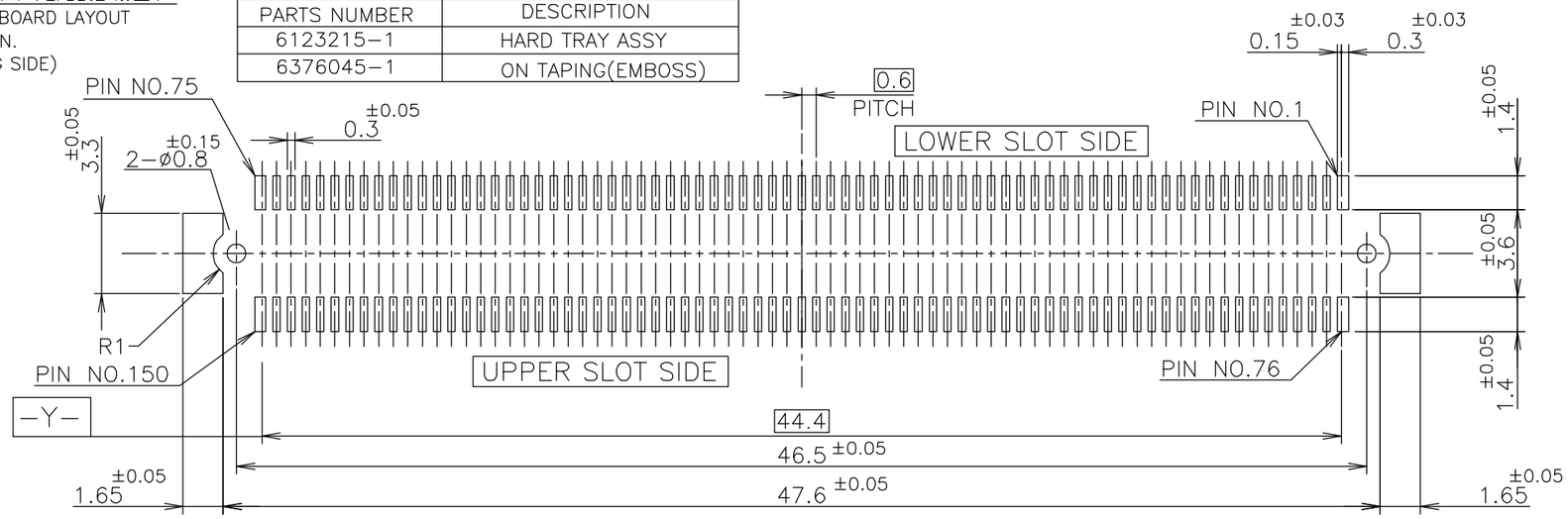

DETAIL C (SCALE 4:1)

PIN ASSIGNMENT

FOR TOP MOUNT

	PIN NO. REC CONN 150P	PIN NO. CARD BUS	PIN NO. REC CONN 150P	PIN NO. CARD BUS
COMMON	75	B35		
	74	B1		
	73	B36		
	72	B2		
	71	B37		
	70	B3		
	69	B38		
	68	B4		
	67	G		
	66	B39		
	65	B5		
	64	B40		
	63	B6		
	62	B41		
	61	B7		
	60	B42		
	59	G		
	58	B8		
	57	B43		
	56	B9		
	55	B44		
	54	B10		
	53	B45		
	52	B11		
	51	G		
	50	B46		
	49	B12		
	48	B47		
	47	B13		
	46	B48		
	45	B14		
	44	B49		
	43	G		
	42	B15		
	41	B50		
	40	B16		
	39	B51 B17		
	38	NONE		
	37	B52 B18		
	36	B19		
	35	B53		
	34	B20		
	33	G		
	32	B54		
	31	B21		
	30	B55		
	29	B22		
	28	B56		
	27	B23		
	26	B57		
	25	G		
	24	B24		
	23	B58		
	22	B25		
	21	B59		
	20	B26		
	19	B60		
	18	B27		
	17	G		
	16	B61		
	15	B28		
	14	B62		
	13	B29		
	12	B63		
	11	B30		
	10	B64		
	9	G		
	8	B31		
	7	B65		
	6	B32		
	5	B66		
	4	B33		
	3	B67		
	2	B34		
	1	B68		
COMMON				

LOWER SLOT

UPPER SLOT

THIS DRAWING IS A CONTROLLED DOCUMENT.

DIMENSIONS: 単位： 粍 mm

TOLERANCES UNLESS OTHERWISE SPECIFIED: 一般公差

0 PLC	± 0.5
1 PLC	± 0.5
2 PLC	± 0.5
~~3 PLC~~	~~± –~~
~~4 PLC~~	~~± –~~
~~ANGLES~~	~~± –~~

MATERIAL 材料

FINISH 仕上

DWN

CHK

APVD

PRODUCT SPEC 製品規格

APPLICATION SPEC 取付適用規格

WEIGHT

CUSTOMER DRAWING

tyco Electronics

Tyco Electronics AMP K.K.
Kawasaki, Japan

NAME 名称

CARD BUS 3.5mmH
DOUBLE SLOT TOP MOUNT PUSH-PUSH TYPE

SIZE	CAGE CODE	DRAWING NO 番号	RESTRICTED TO
A3	00779	C-6565126	

SCALE 尺度	SHEET	OF	REV
1:1	2	2	A

AMP 1470-19 REV 31MAR2000

L:\EN22_PE_CAD\FJ014986_Tsuzaki\Pb-free\C-6565126.dwg