THIS DRAWING IS UNPUBLISHED. RELEASED FOR PUBLICATION ,2006.
© COPYRIGHT 2006 BY TYCO ELECTRONICS CORPORATION. ALL RIGHTS RESERVED.

LOC	DIST
J	

REVISIONS 変更

P	LTR	DESCRIPTION	DATE	DWN	APVD
	A	RELEASED	17JAN06A	T.T	Y.Y

6473179-1: AS SHOWN

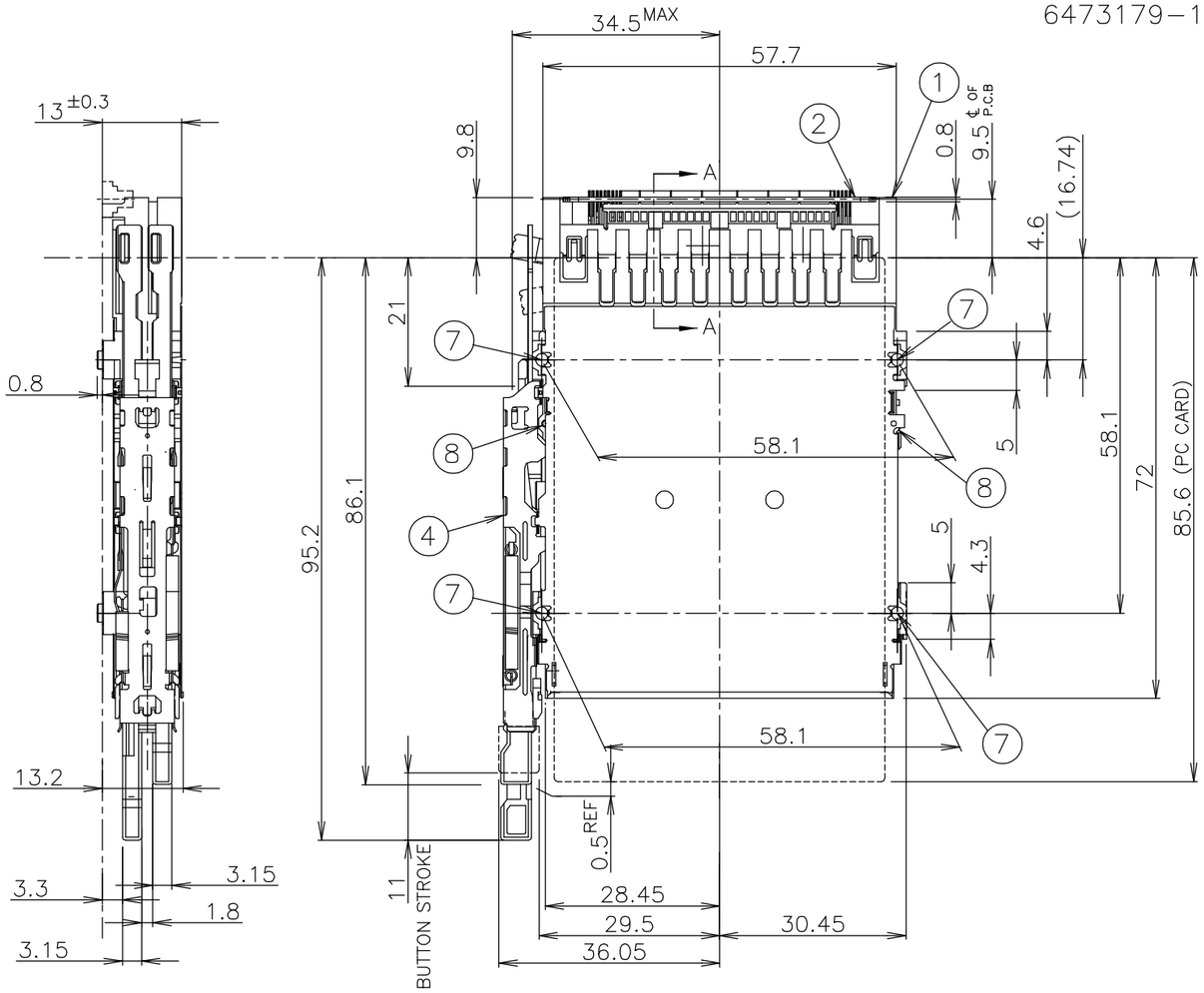

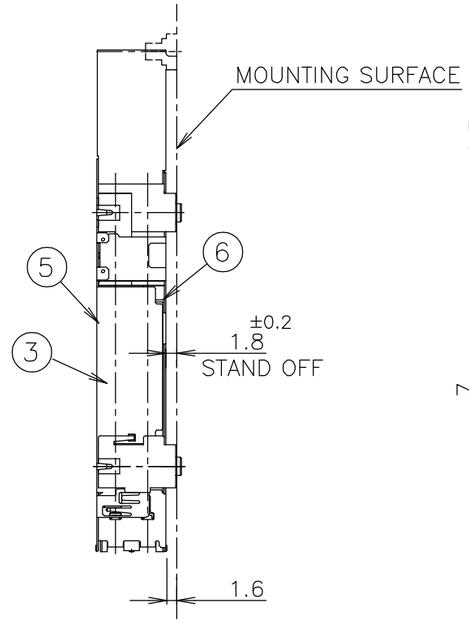

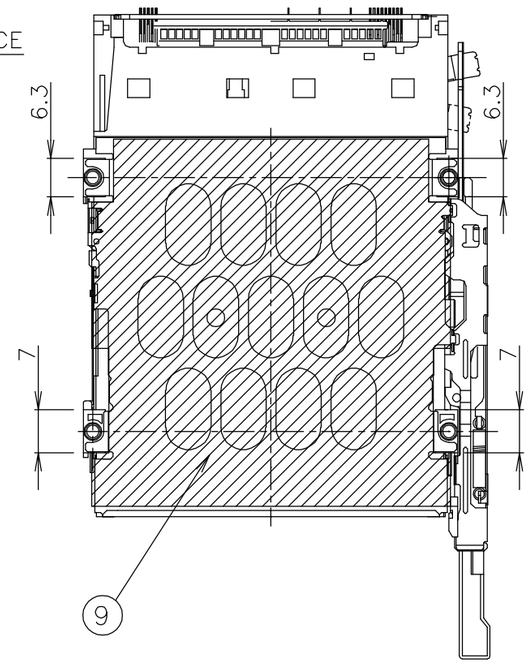

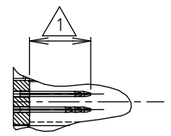

A–A
(SCALE 2:1)

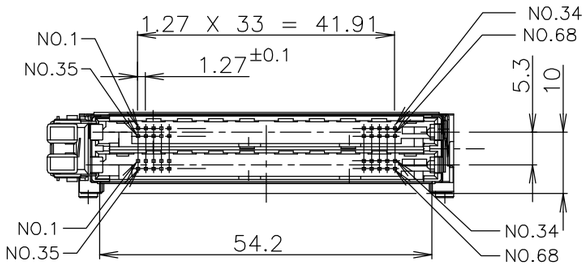

△1 TABLE 表 1

POST LENGTH	5	3.5	4.25
回路番号 CIRCUIT NO.	1,17,34,35,51,68	36,67	その他 OTHERS

数量 QTY	名称 NAME	ITEM
1	INSULATOR SHEET	9
2	SPRING PIN	8
4	NUT (M2)	7
1	SHIELDING SHELL (LOWER)	6
1	SHIELDING SHELL (UPPER)	5
1	PUSH PUSH SUB ASS'Y (TOP,LEFT)	4
1	HOUSING ARM (RIGHT)	3
1	PWB (TOP MOUNT)	2
1	HEADER ASSEMBLY(TOP.LEFT)	1

△1 ポスト長は表1を参照の事。
2 推奨ネジ締め付けトルク: 0.15N·m(1.5kgf·cm)から0.2N·m(2kgf·cm)
3 適応PCカード: PCMCIA準拠のPCカード
4 ネジの締め付け時のナット押し付け力: 14.7N(1.5kgf)以下

△1 REFER TO TABLE 1 FOR POST CONTACT LENGTH.
2 RECOMMENDED TIGHTENING TORUQUE
:FROM 0.15N·m(1.5kgf·cm) TO 0.2N·m(2kgf·cm)
3 APPLIED CARD: PCMCIA ATTRIBUTE PC CARD.
4 THE AXIAL FORCE TO NUTS WHEN MOUNTING
CARDBUS: 14.7N(1.5kgf) MAX

THIS DRAWING IS A CONTROLLED DOCUMENT.

DIMENSIONS: 単位: 粍 mm

TOLERANCES UNLESS OTHERWISE SPECIFIED: 一般公差

0 PLC	± 0.5
1 PLC	± 0.5
2 PLC	± 0.5
3 PLC	± 0.5
4 PLC	± 0.5
ANGLES	±

MATERIAL 材料

FINISH 仕上

DWN	T.TSUZAKI	13JAN06
CHK	T.FUTATSUGI	17JAN06
APVD	Y.YAMAMOTO	17JAN06
PRODUCT SPEC 製品規格	108-78192	
APPLICATION SPEC 取付適用規格		
WEIGHT	37gr	

tyco Electronics

Tyco Electronics AMP K.K.
Kawasaki, Japan

NAME 名称

CARD BUS
DOUBLE SLOT TOP MOUNT PUSH-PUSH TYPE

SIZE	CAGE CODE	DRAWING NO 番号	RESTRICTED TO
A3	00779	C-6473179	

CUSTOMER DRAWING

SCALE 尺度	SHEET	OF	REV
1:1	1	2	A

THIS DRAWING IS UNPUBLISHED. RELEASED FOR PUBLICATION , .
© COPYRIGHT BY TYCO ELECTRONICS CORPORATION. ALL RIGHTS RESERVED.

LOC J DIST

REVISIONS 変更

P	LTR	DESCRIPTION	DATE	DWN	APVD
		SEE SHEET 1			

6473179-1: AS SHOWN

0.6mm PITCH CARD EDGE CONNECTOR FOR THIS CARDBUS PRODUCTS

PARTS NUMBER	DESCRIPTION
6123215-1	HARD TRAY ASSY
6376045-1	ON TAPING(EMBOSS)

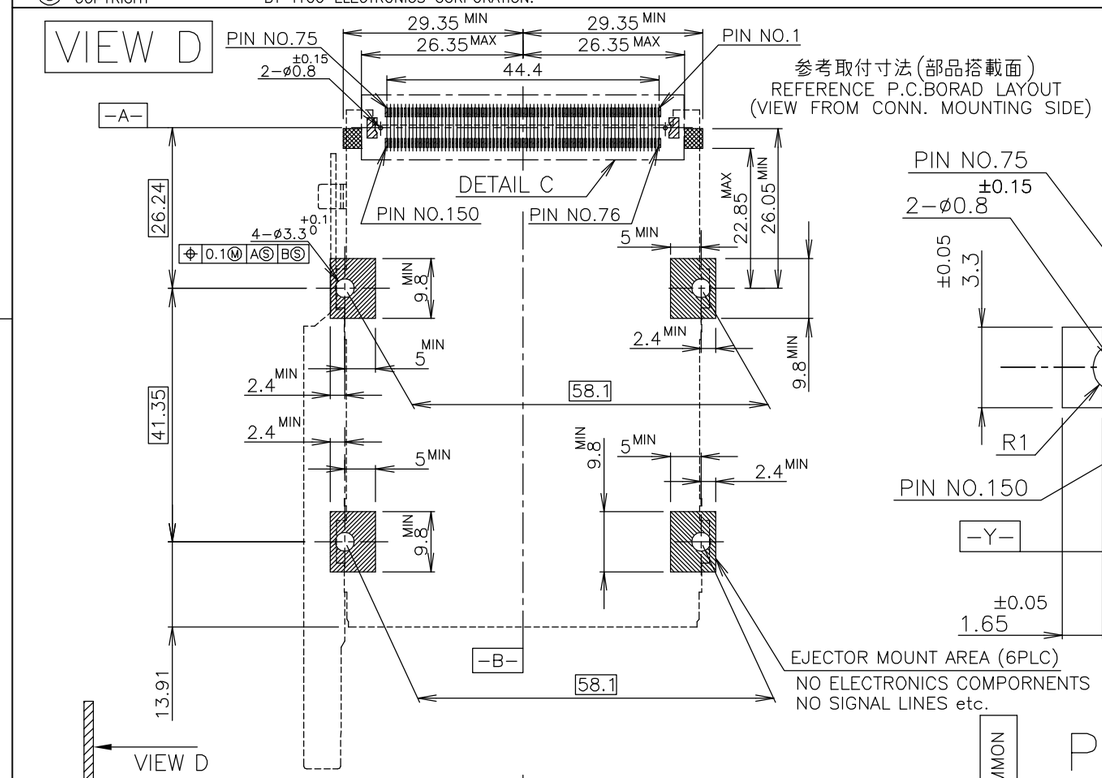

参考取付寸法(部品搭載面)
REFERENCE P.C.BORAD LAYOUT
(VIEW FROM CONN. MOUNTING SIDE)

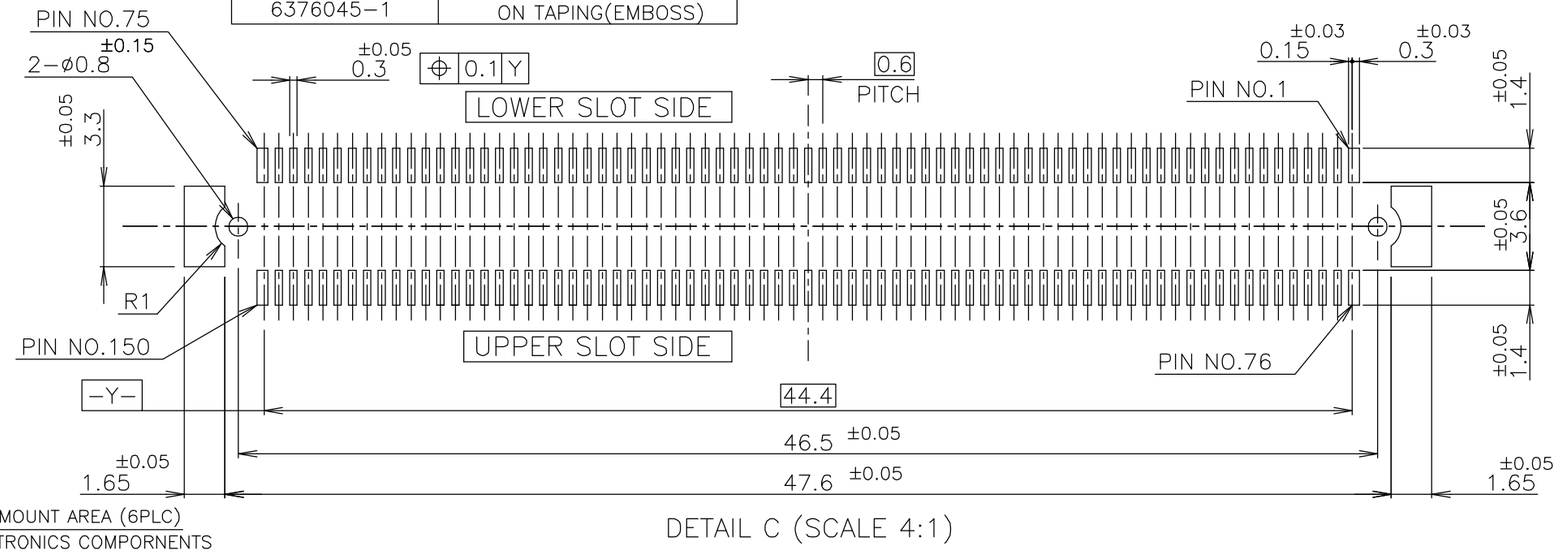

DETAIL C (SCALE 4:1)

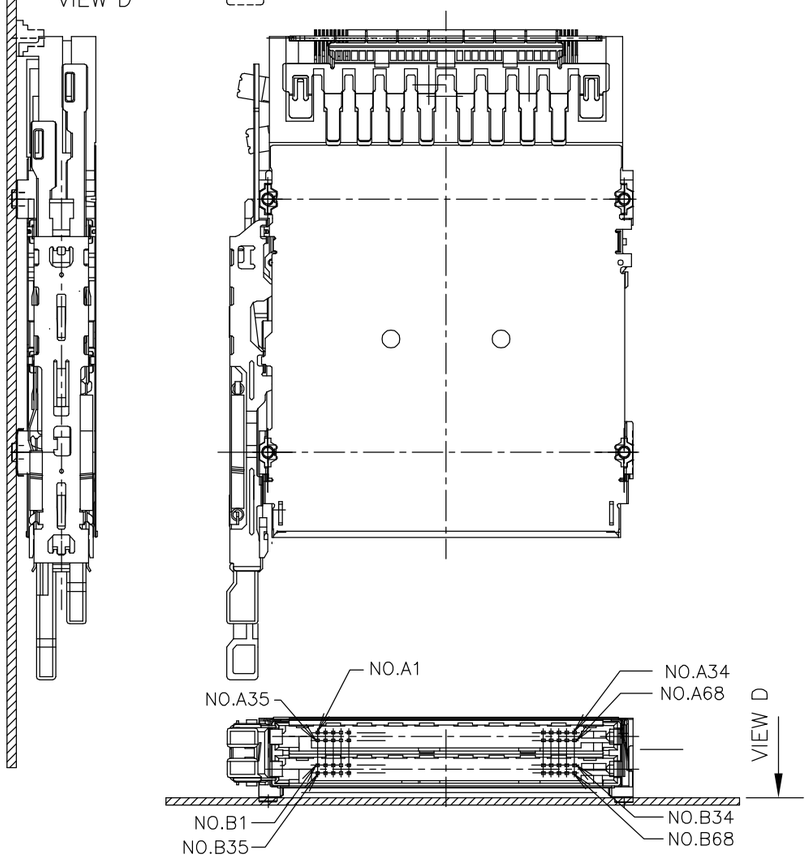

PIN ASSIGNMENT

FOR TOP MOUNT

	PIN NO. REC CONN 150P	PIN NO. CARD BUS		PIN NO. REC CONN 150P	PIN NO. CARD BUS
COMMON	75	B35		150	A35
	74	B1		149	A1
	73	B36		148	A36
	72	B2		147	A2
	71	B37		146	A37
	70	B3		145	A3
	69	B38		144	A38
	68	B4		143	A4
	67	G		142	G
	66	B39		141	A39
	65	B5		140	A5
	64	B40		139	A40
	63	B6		138	A6
	62	B41		137	A41
	61	B7		136	A7
	60	B42		135	A42
	59	G		134	G
	58	B8		133	A8
	57	B43		132	A43
	56	B9		131	A9
	55	B44		130	A44
	54	B10		129	A10
	53	B45		128	A45
	52	B11		127	A11
	51	G		126	G
	50	B46		125	A46
	49	B12		124	A12
	48	B47		123	A47
	47	B13		122	A13
	46	B48		121	A48
	45	B14		120	A14
	44	B49		119	A49
	43	G		118	G
	42	B15		117	A15
	41	B50		116	A50
	40	B16		115	A16
	39	B51 B17		114	A51 A17
	38			113	
	37	B52 B18		112	A52 A18
	36	B19		111	A19
	35	B53		110	A53
	34	B20		109	A20
	33	G		108	G
	32	B54		107	A54
	31	B21		106	A21
	30	B55		105	A55
	29	B22		104	A22
	28	B56		103	A56
	27	B23		102	A23
	26	B57		101	A57
	25	G		100	G
	24	B24		99	A24
	23	B58		98	A58
	22	B25		97	A25
	21	B59		96	A59
	20	B26		95	A26
	19	B60		94	A60
	18	B27		93	A27
	17	G		92	G
	16	B61		91	A61
	15	B28		90	A28
	14	B62		89	A62
	13	B29		88	A29
	12	B63		87	A63
	11	B30		86	A30
	10	B64		85	A64
	9	G		84	G
	8	B31		83	A31
	7	B65		82	A65
	6	B32		81	A32
	5	B66		80	A66
	4	B33		79	A33
	3	B67		78	A67
	2	B34		77	A34
	1	B68		76	A68
COMMON					

LOWER SLOT — UPPER SLOT

THIS DRAWING IS A CONTROLLED DOCUMENT.

DIMENSIONS: 単位： 耗 mm

TOLERANCES UNLESS OTHERWISE SPECIFIED: 一般公差

0 PLC	± 0.5
1 PLC	± 0.5
2 PLC	± 0.5
3 PLC	± 0.5
4 PLC	± 0.5
ANGLES	±

MATERIAL 材料 | FINISH 仕上

DWN | CHK | APVD | PRODUCT SPEC 製品規格 | APPLICATION SPEC 取付適用規格 | WEIGHT

tyco Electronics

Tyco Electronics AMP K.K.
Kawasaki, Japan

NAME 名称

CARD BUS
DOUBLE SLOT TOP MOUNT PUSH-PUSH TYPE

SIZE	CAGE CODE	DRAWING NO 番号	RESTRICTED TO
A3	00779	C-6473179	

CUSTOMER DRAWING | SCALE 尺度 1:1 | SHEET 2 OF 2 | REV A