© – TE Connectivity. All Rights Reserved.

REVISIONS					
P	LTR	DESCRIPTION	DATE	DWN	APVD
	W	REVISED PER ECR-24-213594	04JUL2024	RK	FJS

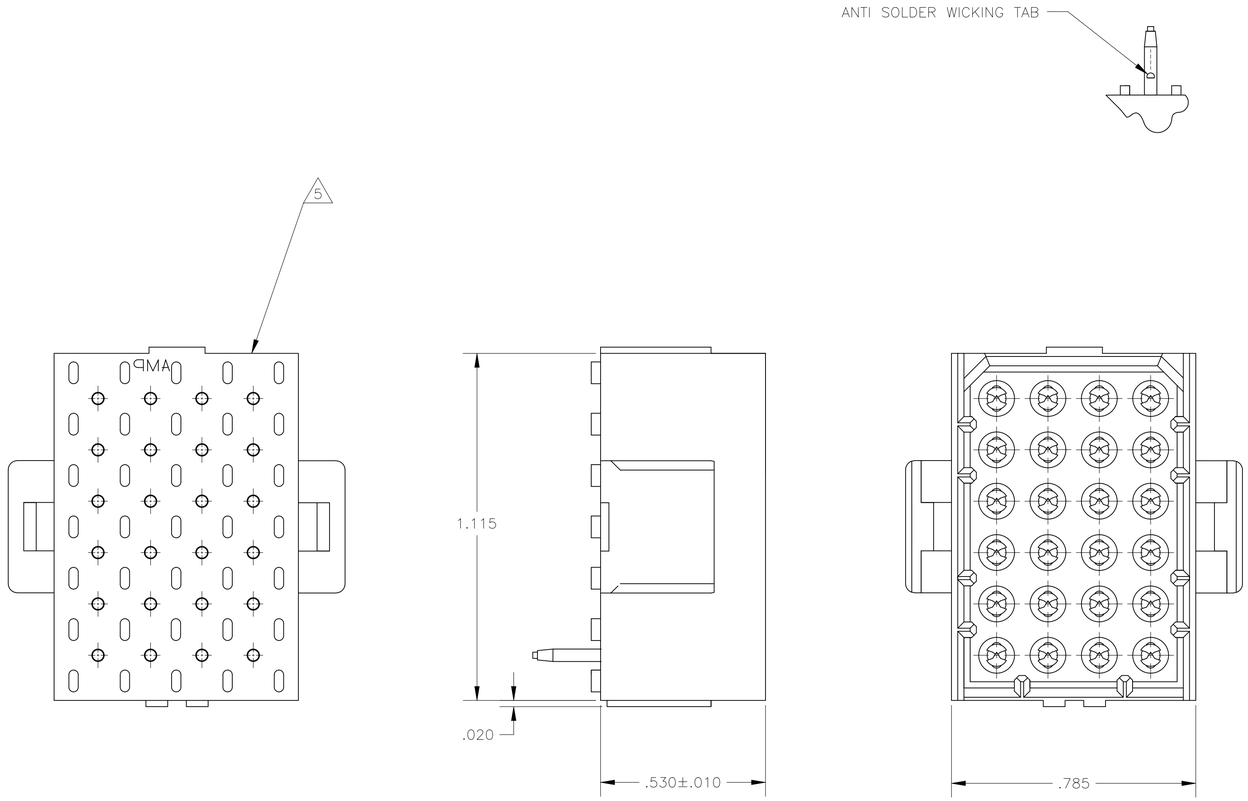

1. FITS SOCKET HOUSING 640525.
2. ASSEMBLY CONFORMS TO AMP SOLDERABILITY SPEC. 109-11-3.
3. FOR USE WITH .063 THICK P.C. BOARD.
4. CONTACT IS PLATED OVERALL WITH.000050 NICKEL, THEN .000030 PRECIOUS METAL PLATE OVER CONTACT LENGTH INDICATED AND .000150 MATTE TIN-LEAD ON SOLDER TAIL END.
5. UL AND CSA LOGO LOCATED ON THIS SURFACE.
6. FOR USE WITH .120 THICK P.C. BOARD.
7. FOR USE WITH .093 THICK P.C. BOARD.
8. TRAY PACKAGED VERSION OF 640505-1. PACKAGED 54 PCS. PER TRAY AND 7 TRAYS PER BOX.
9. CONTACT IS PLATED OVERALL WITH.000050 NICKEL, THEN .000030 PRECIOUS METAL PLATE OVER CONTACT LENGTH INDICATED AND .000150 MATTE TIN ON SOLDER TAIL END.
10. OBSOLETE PARTS: OBSOLETE CIS STREAMLINING PER D.RENAUD/D.SINISI
11. PARTITION PACKED AND BOXED, 270PCS PER CARTON.
12. HOUSING MATERIAL: PA66, BLACK, UL 94 V-0 RATED
    CONTACT MATERIAL: PHOSPHOR BRONZE

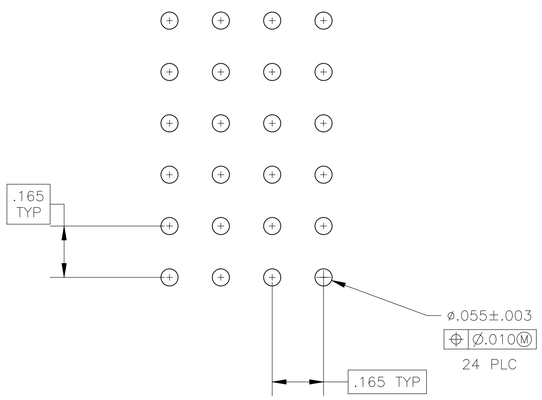

RECOMMENDED P.C. BOARD LAYOUT

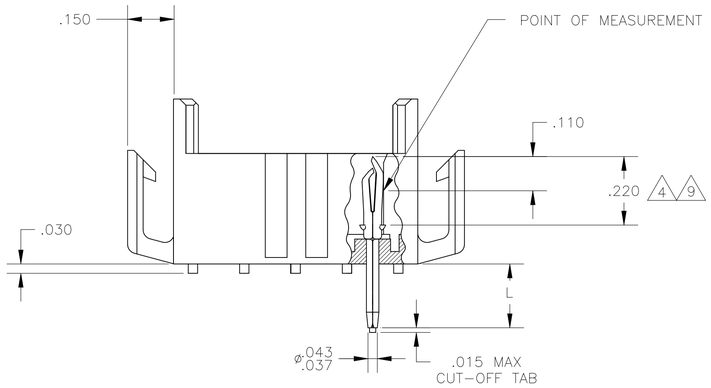

11 OBSOLETE	.210 6	GOLD 4	~~1-640505-4~~
10 OBSOLETE	.180 7	GOLD 9	~~2-640505-6~~
	.210 6	PRECIOUS METAL PLATE 9	2-640505-4
	.150 3	PRECIOUS METAL PLATE 9	2-640505-2
8 OBSOLETE	.150 3	PRE-TIN	~~1-640505-0~~
10 OBSOLETE	.180 7	GOLD	~~640505-6~~
	.210 6	PRECIOUS METAL PLATE 4	640505-4
	.210 6	PRE-TIN	640505-3
	.150 3	PRECIOUS METAL PLATE 4	640505-2
	.150 3	PRE-TIN	640505-1
"L"	+.010 -.020	PIN FINISH	PART NUMBER

.010	0.25	.055	1.40	.210	5.33	–	–
.008	0.20	.043	1.09	.180	4.57	–	–
.005	0.13	.037	0.94	.165	4.19	1.115	28.32
.003	0.08	.030	0.76	.150	3.81	.785	19.94
.000050	0.00127	.020	0.51	.110	2.79	.530	13.46
.000030	0.00076	.015	0.38	.063	1.60	.220	5.59
IN	MM	IN	MM	IN	MM	IN	MM

CONVERSION TABLE

THIS DRAWING IS A CONTROLLED DOCUMENT.

DIMENSIONS: INCHES

TOLERANCES UNLESS OTHERWISE SPECIFIED:
0 PLC ± –
1 PLC ± –
2 PLC ± –
3 PLC ± .005
4 PLC ± –
ANGLES ± 0° 30'

MATERIAL 12

FINISH SEE FINISH

DWN J. HUFFMAN 28APR98
CHK R. SWING 28APR98
APVD T. REDDICK 28APR98
PRODUCT SPEC —
APPLICATION SPEC —
WEIGHT —

TE Connectivity

NAME HEADER ASSEMBLY, PIN, 24 POSITION, MR. –

SIZE A1 | CAGE CODE 00779 | DRAWING NO C-640505 | RESTRICTED TO —

CUSTOMER DRAWING | SCALE 4:1 | SHEET 1 OF 1 | REV W

4805 (1/15)