© – TE Connectivity. All Rights Reserved.

REVISIONS					
P	LTR	DESCRIPTION	DATE	DWN	APVD
	S	REVISED PER ECO-21-006898	14DEC2021	RK	MZ

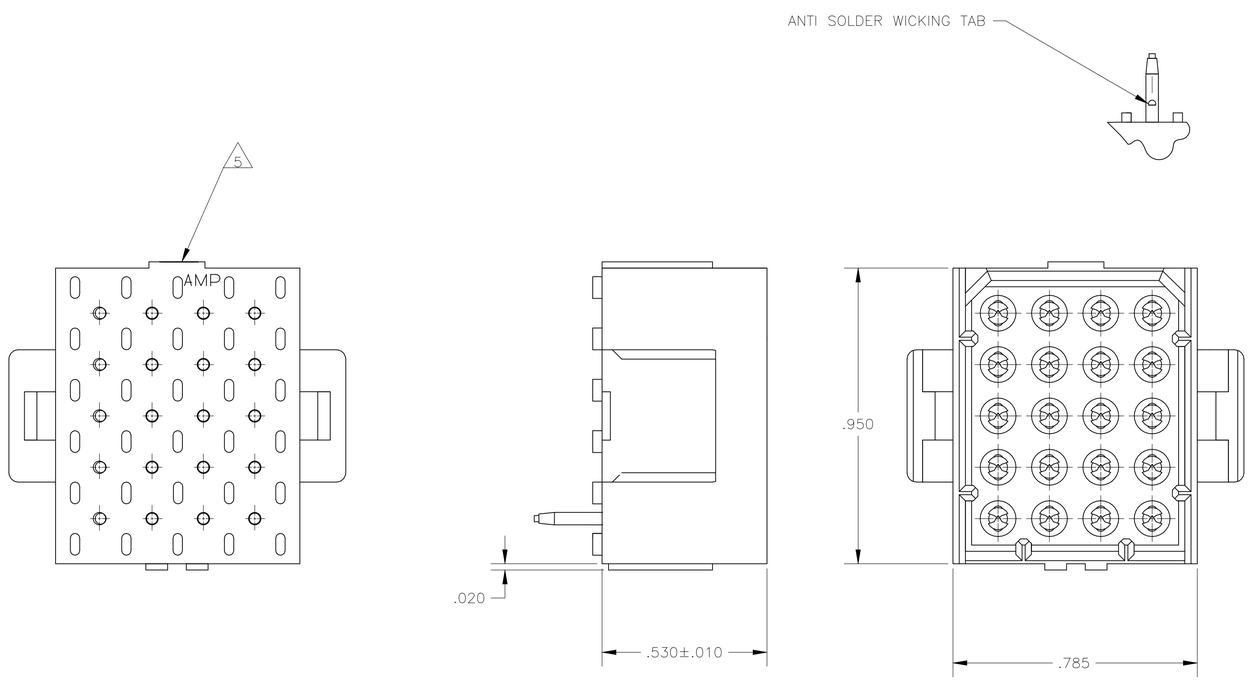

1 FITS SOCKET HOUSING 640524.

2 ASSEMBLY CONFORMS TO AMP SOLDERABILITY SPEC. 109-11-3.

3 FOR USE WITH .063 THICK P.C. BOARD.

4 CONTACT IS PLATED OVERALL WITH.000050 NICKEL, THEN .000030 GLD OVER CONTACT LENGTH INDICATED AND .000150 MATTE TIN-LEAD ON SOLDER TAIL END.

5 UL AND CSA LOGO LOCATED ON THIS SURFACE.

6 FOR USE WITH .120 THICK P.C. BOARD.

7 CONTACT IS PLATED OVERALL WITH.000050 NICKEL, THEN .000030 GLD OVER CONTACT LENGTH INDICATED AND .000150 MATTE TIN ON SOLDER TAIL END.

8 HOUSING MATERIAL: PA66, BLACK, UL 94 V-0 RATED
CONTACT MATERIAL: PHOSPHOR BRONZE

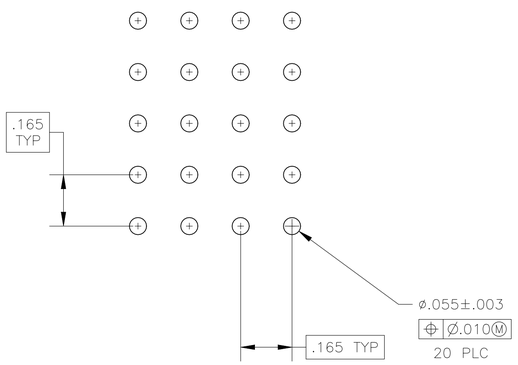

RECOMMENDED P.C. BOARD LAYOUT

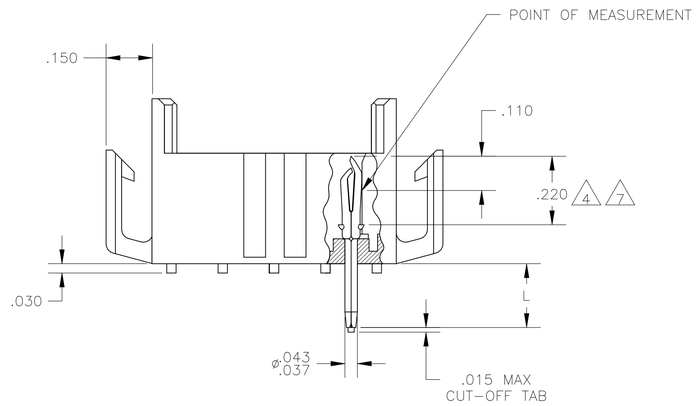

	.210 6	GOLD 7	2-640504-4
	.150 3	GOLD 7	2-640504-2
	.210 6	GOLD 4	640504-4
	.210 6	PRE-TIN	640504-3
OBSOLETE	.150 3	GOLD 4	~~640504-2~~
	.150 3	PRE-TIN	640504-1
	"L" +.010 -.020	PIN FINISH	PART NUMBER

.010	0.25	.055	1.40	.220	5.59	–	–
.008	0.20	.043	1.09	.210	5.33	–	–
.005	0.13	.037	0.94	.165	4.19	–	–
.003	0.08	.030	0.76	.150	3.81	.950	24.13
.000050	0.00127	.020	0.51	.110	2.79	.785	19.94
.000030	0.00076	.015	0.38	.063	1.60	.530	13.46
IN	MM	IN	MM	IN	MM	IN	MM

CONVERSION TABLE

THIS DRAWING IS A CONTROLLED DOCUMENT.

DIMENSIONS: INCHES

TOLERANCES UNLESS OTHERWISE SPECIFIED:
0 PLC ± –
1 PLC ± –
2 PLC ± –
3 PLC ± .005
4 PLC ± –
ANGLES ± 0° 30'

MATERIAL 8

FINISH SEE TABLE

DWN J. HUFFMAN 28APR98
CHK R. SWING 28APR98
APVD T. REDDICK 28APR98

PRODUCT SPEC –
APPLICATION SPEC –
WEIGHT –

TE Connectivity

NAME HEADER ASSEMBLY, PIN, 20 POSITION, MR.

SIZE A1 | CAGE CODE 00779 | DRAWING NO C-640504 | RESTRICTED TO –

CUSTOMER DRAWING | SCALE 4:1 | SHEET 1 OF 1 | REV S

4805 (1/15)