© – TE Connectivity. All Rights Reserved.

REVISIONS					
P	LTR	DESCRIPTION	DATE	DWN	APVD
	T	REVISED PER ECR-24-213594	03JUL2024	RK	FJS

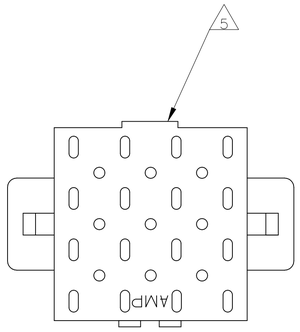

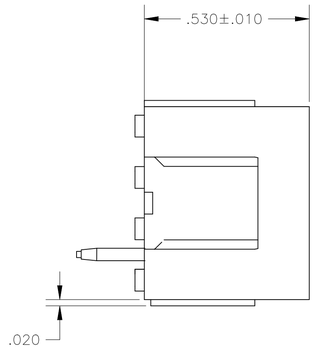

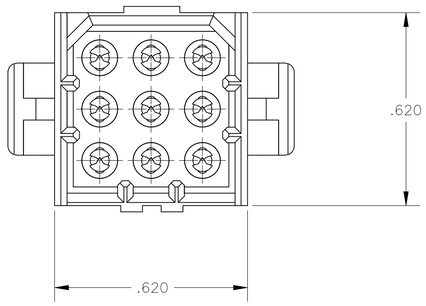

1. FITS SOCKET HOUSING 640521.
2. ASSEMBLY CONFORMS TO AMP SOLDERABILITY SPEC. 109-11-3.
3. FOR USE WITH .063 THICK P.C. BOARD.
4. CONTACT IS PLATED OVERALL WITH.000050 NICKEL, THEN .000030 PRECIOUS METAL PLATE OVER CONTACT LENGTH INDICATED AND .000150 MATTE TIN-LEAD ON SOLDER TAIL END.
5. UL AND CSA LOGO LOCATED ON THIS SURFACE.
6. FOR USE WITH .120 THICK P.C. BOARD.
7. CONTACT IS PLATED OVERALL WITH.000050 NICKEL, THEN .000030 PRECIOUS METAL PLATE OVER CONTACT LENGTH INDICATED AND .000150 MATTE TIN ON SOLDER TAIL END.
8. HOUSING MATERIAL: PA66, BLACK, UL 94 V-0 RATED
   CONTACT MATERIAL: PHOSPHOR BRONZE

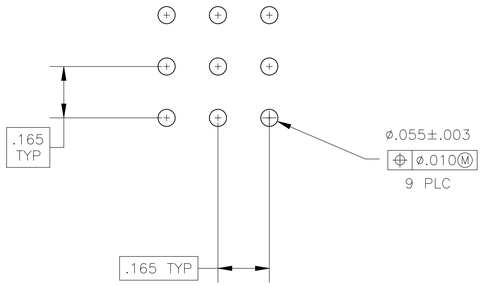

RECOMMENDED P.C. BOARD LAYOUT

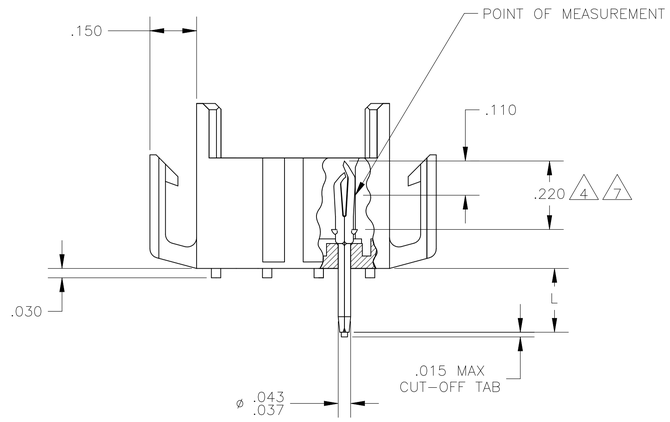

.210 6	PRECIOUS METAL PLATE 7	2-640501-4
.150 3	PRECIOUS METAL PLATE 7	2-640501-2
.210 6	PRECIOUS METAL PLATE 4	640501-4
.210 6	PRE-TIN	640501-3
.150 3	PRECIOUS METAL PLATE 4	640501-2
.150 3	PRE-TIN	640501-1
"L" +.010 -.020	PIN FINISH	PART NUMBER

.008	0.20	.037	0.94	.150	3.81	.620	15.75
.005	0.13	.030	0.76	.110	2.79	.530	13.46
.003	0.08	.020	0.51	.063	1.60	.220	5.59
.000050	0.00127	.015	0.38	.055	1.40	.210	5.33
.000030	0.00076	.010	0.25	.043	1.09	.165	4.19
IN	MM	IN	MM	IN	MM	IN	MM

CONVERSION TABLE

METRIC

THIS DRAWING IS A CONTROLLED DOCUMENT.

DIMENSIONS: INCHES

TOLERANCES, UNLESS OTHERWISE SPECIFIED:
0 PLC ± –
1 PLC ± –
2 PLC ± –
3 PLC ± .005
4 PLC ± –
ANGLES ± 0° 30'

MATERIAL 8

FINISH SEE FINISH

DWN J. HUFFMAN 28 APR 98
CHK R. SWING 28 APR 98
APVD T. BEDDICK 28 APR 98

PRODUCT SPEC –
APPLICATION SPEC –
WEIGHT –

TE Connectivity

NAME HEADER ASSEMBLY, PIN, 9 POSITION MR.

SIZE	CAGE CODE	DRAWING NO	RESTRICTED TO
A1	00779	C-640501	–

CUSTOMER DRAWING | SCALE 4:1 | SHEET 1 OF 1 | REV T

4805 (1/15)