THIS DRAWING IS UNPUBLISHED. RELEASED FOR PUBLICATION -
© COPYRIGHT 20 BY TYCO ELECTRONICS CORPORATION, ALL RIGHTS RESERVED.

LOC	DIST
FX	00

REVISIONS

P	LTR	DESCRIPTION	DATE	DWN	APVD
	A	RELEASDED PER EC 0K80-0231-02	26NOV2002	RGV	SSA
	B	REVISED PER EC 0K80-0077-03	14APR2003	AH	SSA
	B1	REVISED PER ECR 06-006932	28APR2006	DLD	SSA
	B2	REV PER ECR-10-008554	21APR2010	VSS	SA

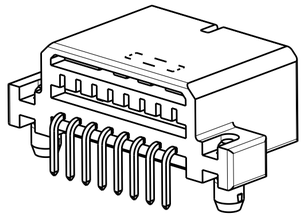

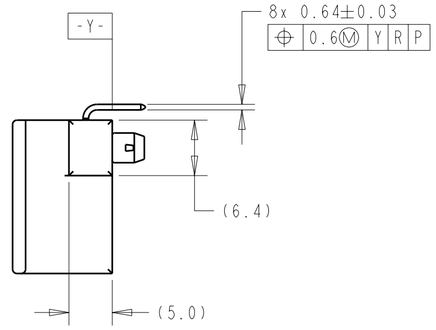

1. TAB RETENTION FORCE: 3kg MIN.
2. TO BE MEASURED BETWEEN -X- AND 2mm FROM -X-
3. NO CRACKS PERMISSIBLE.
4. MATING PLUG PART NUMBER 638971-2.
5. DATUMS AND BASIC DIMENSIONS ESTABLISHED BY CUSTOMER.
6. DATE CODE.
7. MEASUREMENT MADE BETWEEN HOUSING AND BOARDLOCK RETENTION BARB. MEASURE ROTATED 0-45° AROUND CIRCUMFERENCE.

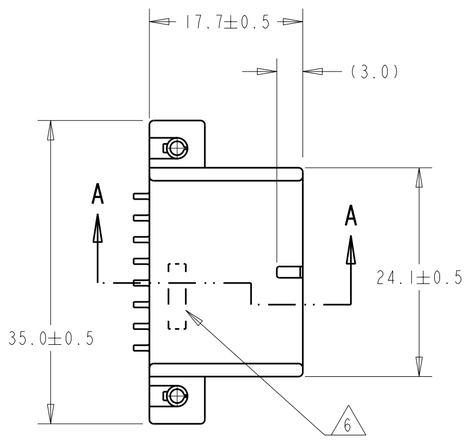

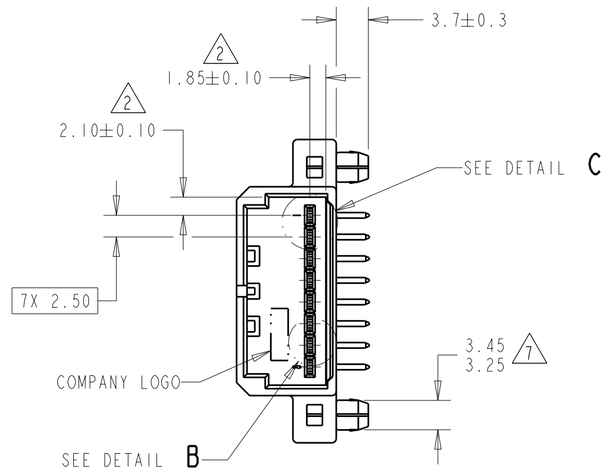

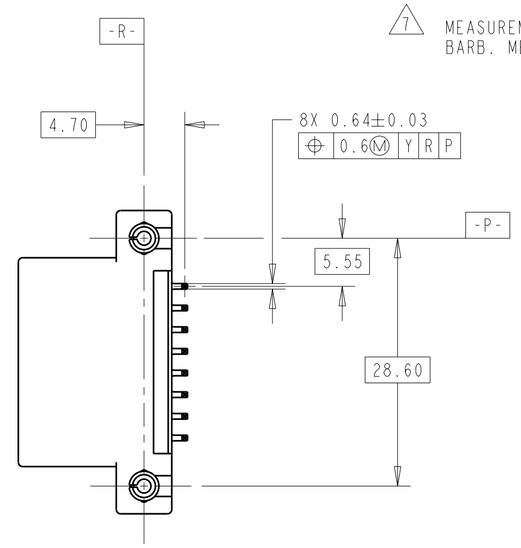

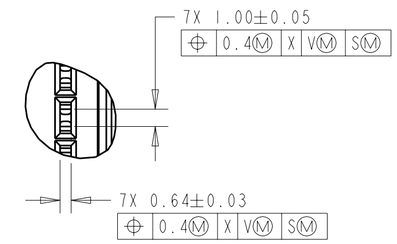

DETAIL B
SCALE 4:1

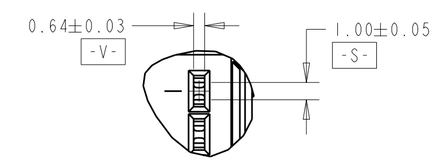

DETAIL C
SCALE 4:1

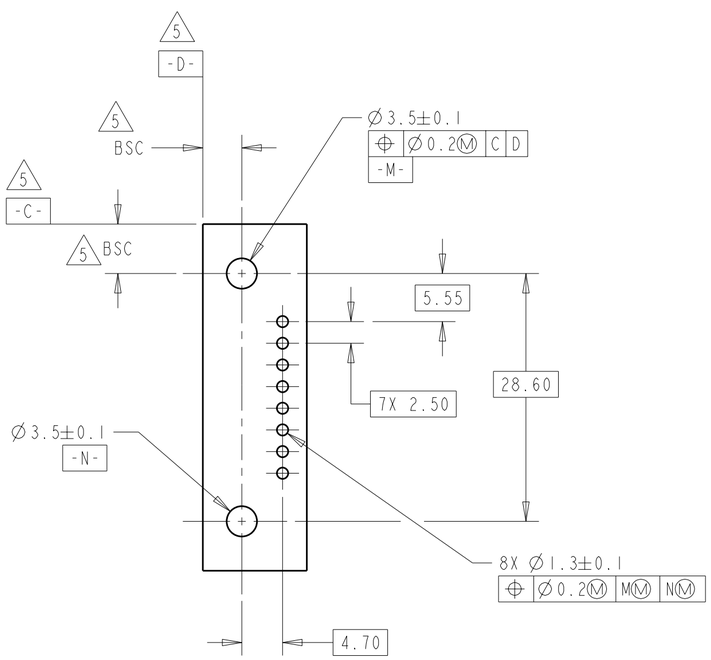

P.C. BOARD LAYOUT
(SOLDER SIDE)

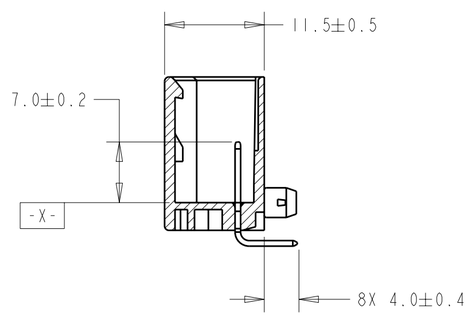

SECTION A-A

TIN OVER NICKEL	BRASS	BLACK	PCT	9-638973-2
CONTACT FINISH	CONTACT MATERIAL	COLOR	HOUSING MATERIAL	PART NUMBER

THIS DRAWING IS A CONTROLLED DOCUMENT FOR TYCO ELECTRONICS CORPORATION. IT IS SUBJECT TO CHANGE AND THE CONTROLLING ENGINEERING ORGANIZATION SHOULD BE CONTACTED FOR THE LATEST REVISION.

DIMENSIONS: mm

TOLERANCES UNLESS OTHERWISE SPECIFIED:
0 PLC ±-
1 PLC ±0.3
2 PLC ±0.15
3 PLC ±-
4 PLC ±-
ANGLES ±1°

MATERIAL: SEE TABLE
FINISH: SEE TABLE

DWN	A.HOLT	08JAN02
CHK	S.ASHLEY	08JAN02
APVD	S.ASHLEY	08JAN02
PRODUCT SPEC	108-5244	
APPLICATION SPEC	-	
WEIGHT	3.58g	

Tyco Electronics
Tyco Electronics
Harrisburg, PA 17105-3608

NAME: ASSEMBLY, 8 POSITION CAP, HORIZONTAL TYPE, .040 MULTI-LOCK/CPA, HIGH TEMPERATURE, WITH BOARDLOCKS

SIZE	CAGE CODE	DRAWING NO	RESTRICTED TO
A2	00779	C-638973	-

CUSTOMER DRAWING | SCALE 2:1 | SHEET 1 OF 1 | REV B2

638973

AMP 1471-9 REV 31MAR2000

Pro/ENGINEER DRAWING