THIS DRAWING IS UNPUBLISHED. RELEASED FOR PUBLICATION ,2006.
© COPYRIGHT 2006 BY TYCO ELECTRONICS CORPORATION. ALL RIGHTS RESERVED.

LOC	DIST
J	

REVISIONS 変更

P	LTR	DESCRIPTION	DATE	DWN	APVD
	A	RELEASED	17JAN06	T.T	Y.Y

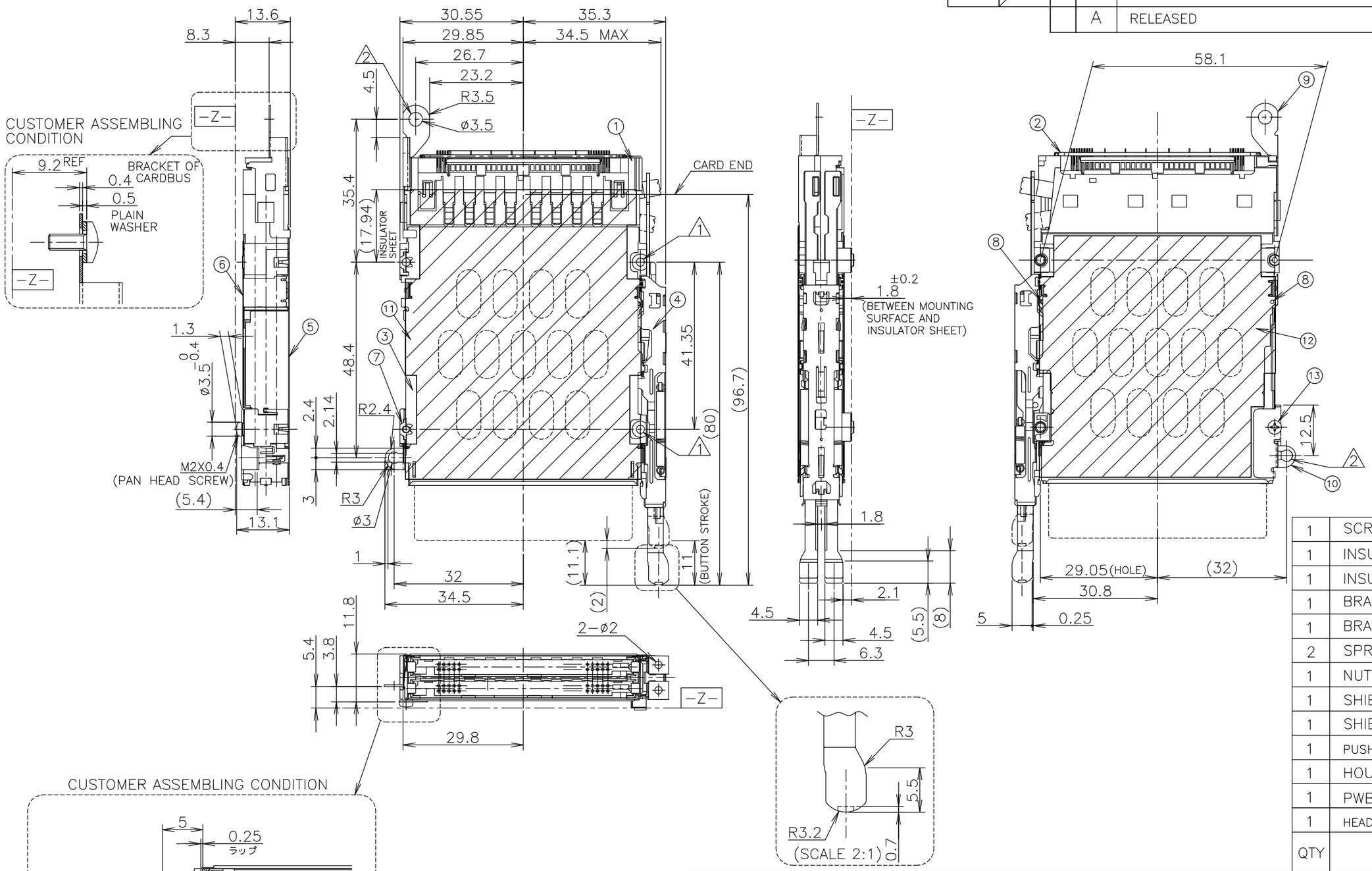

CUSTOMER ASSEMBLING CONDITION

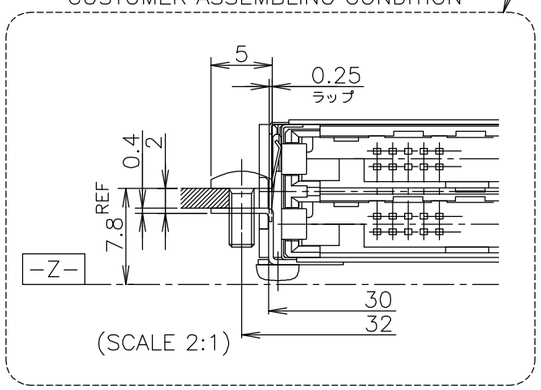

QTY	NAME	ITEM NO.
1	SCREW	⑬
1	INSULATOR SHEET (L)	⑫
1	INSULATOR SHEET (U)	⑪
1	BRACKET-L-B	⑩
1	BRACKET-L-A	⑨
2	SPRING PIN	⑧
1	NUT (M2)	⑦
1	SHIELDING SHELL (LOWER)	⑥
1	SHIELDING SHELL (UPPER)	⑤
1	PUSH PUSH SUB ASSY (TOP, RIGHT)	④
1	HOUSING ARM (TOP, LEFT)	③
1	PWB (TOP MOUNT)	②
1	HEADER ASSEMBLY (TOP,RIGHT)	①

THIS DRAWING IS A CONTROLLED DOCUMENT.

DIMENSIONS: 単位： 粍 mm

TOLERANCES UNLESS OTHERWISE SPECIFIED: 一般公差
0 PLC ± 1 PLC ± 2 PLC ± 3 PLC ± 4 PLC ± ±0.5
ANGLES ±

MATERIAL 材料

FINISH 仕上

DWN	T.TSUZAKI	13JAN06
CHK	T.FUTATSUGI	17JAN06
APVD	Y.YAMAMOTO	17JAN06
PRODUCT SPEC 製品規格	108-78192	
APPLICATION SPEC 取付適用規格		
WEIGHT	36gr	

tyco Electronics

Tyco Electronics AMP K.K.
Kawasaki, Japan

NAME 名称
CARD BUS
DOUBLE SLOT TOP MOUNT PUSH-PUSH TYPE

SIZE	CAGE CODE	DRAWING NO 番号	RESTRICTED TO
A3	00779	C-6376653	

CUSTOMER DRAWING

SCALE 尺度	SHEET	OF	REV
1:1	1	2	A

THIS DRAWING IS UNPUBLISHED. RELEASED FOR PUBLICATION , .
© COPYRIGHT BY TYCO ELECTRONICS CORPORATION. ALL RIGHTS RESERVED.

LOC	DIST
J	

REVISIONS 変更

P	LTR	DESCRIPTION	DATE	DWN	APVD
		SEE SHEET 1			

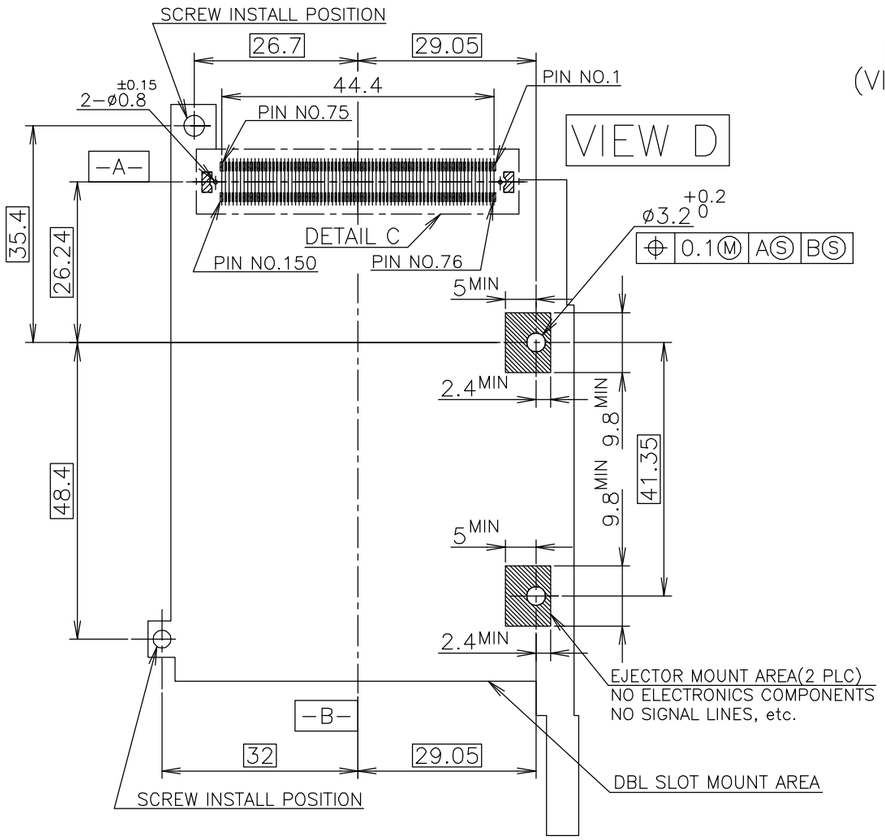

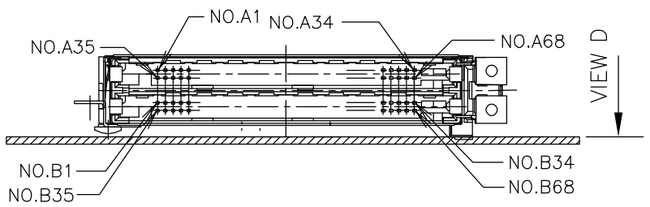

参考取付け寸法（部品搭載面）
REFERENCE P.C.BOARD LAYOUT
(VIEW FROM CONN. MOUNTING SIDE)

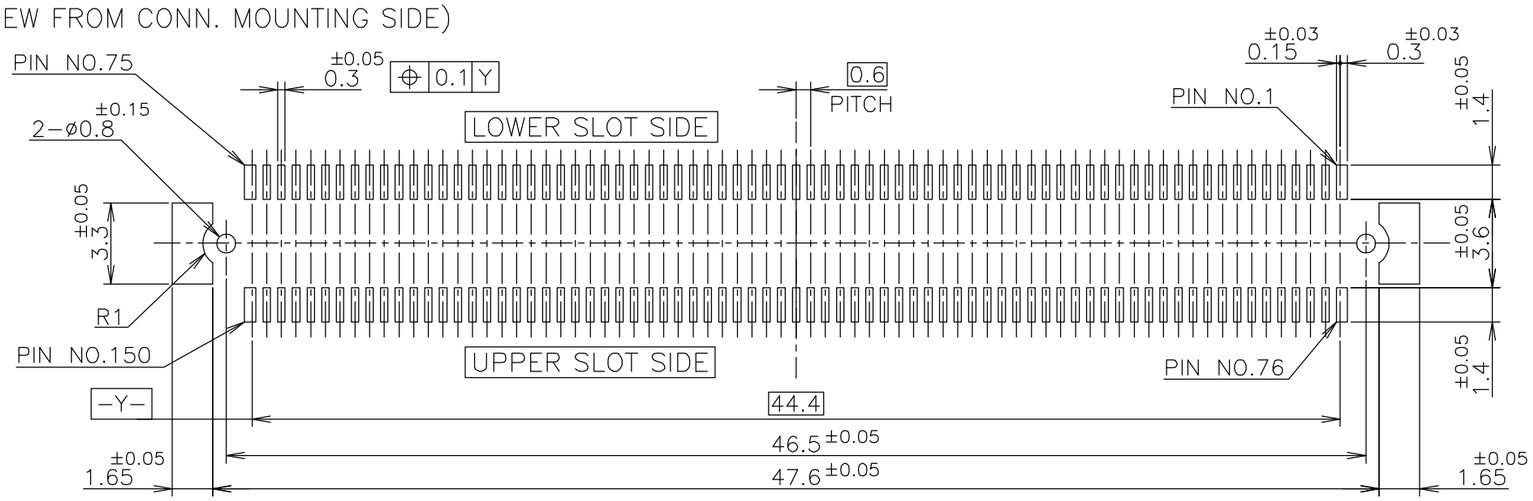

DETAIL C (SCALE 4:1)

PIN ASSIGNMENT

FOR TOP MOUNT

	PIN NO. REC CONN 150P	PIN NO. CARD BUS	PIN NO. REC CONN 150P	PIN NO. CARD BUS
COMMON	75	B35	150	A35
	74	B1	149	A1
	73	B36	148	A36
	72	B2	147	A2
	71	B37	146	A37
	70	B3	145	A3
	69	B38	144	A38
	68	B4	143	A4
	67	G	142	G
	66	B39	141	A39
	65	B5	140	A5
	64	B40	139	A40
	63	B6	138	A6
	62	B41	137	A41
	61	B7	136	A7
	60	B42	135	A42
	59	G	134	G
	58	B8	133	A8
	57	B43	132	A43
	56	B9	131	A9
	55	B44	130	A44
	54	B10	129	A10
	53	B45	128	A45
	52	B11	127	A11
	51	G	126	G
	50	B46	125	A46
	49	B12	124	A12
	48	B47	123	A47
	47	B13	122	A13
	46	B48	121	A48
	45	B14	120	A14
	44	B49	119	A49
	43	G	118	G
	42	B15	117	A15
	41	B50	116	A50
	40	B16	115	A16
	39	B51 B17	114	A51 A17
	38	NONE	113	NONE
	37	B52 B18	112	A52 A18
	36	B19	111	A19
	35	B53	110	A53
	34	B20	109	A20
	33	G	108	G
	32	B54	107	A54
	31	B21	106	A21
	30	B55	105	A55
	29	B22	104	A22
	28	B56	103	A56
	27	B23	102	A23
	26	B57	101	A57
	25	G	100	G
	24	B24	99	A24
	23	B58	98	A58
	22	B25	97	A25
	21	B59	96	A59
	20	B26	95	A26
	19	B60	94	A60
	18	B27	93	A27
	17	G	92	G
	16	B61	91	A61
	15	B28	90	A28
	14	B62	89	A62
	13	B29	88	A29
	12	B63	87	A63
	11	B30	86	A30
	10	B64	85	A64
	9	G	84	G
	8	B31	83	A31
	7	B65	82	A65
	6	B32	81	A32
	5	B66	80	A66
	4	B33	79	A33
	3	B67	78	A67
	2	B34	77	A34
	1	B68	76	A68
COMMON				

LOWER SLOT

UPPER SLOT

1. DBL SLOTの使用取付けねじは M2, P=0.4 である。(2箇所)
   (メートル並目ねじ、M2)
2. 推奨取付けネジ: M2.5
3. 推奨ネジ締め付けトルク: 0.15N.m~0.2N.m(1.5~2.0Kgf.cm)
4. ネジの締め付け時のナット押し付け力: 14.7N(1.5Kgf)以下
5. 適応PCカード: PCMCIA準拠のPCカード

1. DOUBLE SLOT INSTALLED SCREW (M2, P=0.4) (2 PLC)
2. RECOMMEND INSTALLED SCREW:M2.5
3. RECOMMENDED TIGHTENING TORQUE: 0.15~0.2Nm(1.5~2Kgf·cm)
4. THE AXIAL FORCE TO NUTS WHEN MOUNTING CARDBUS: 14.7N(1.5Kgf) MAX
5. APPLIED CARD: PCMCIA ATTRIBUTE PC CARD.

THIS DRAWING IS A CONTROLLED DOCUMENT.

DIMENSIONS: 単位： 耗 mm

TOLERANCES UNLESS OTHERWISE SPECIFIED: 一般公差
0 PLC ± 1 PLC ± 2 PLC ± 3 PLC ± 4 PLC ± ANGLES ± ±0.5

MATERIAL 材料 | FINISH 仕上

DWN | CHK | APVD | PRODUCT SPEC 製品規格 | APPLICATION SPEC 取付適用規格 | WEIGHT

tyco Electronics — Tyco Electronics AMP K.K. Kawasaki, Japan

NAME 名称: CARD BUS DOUBLE SLOT TOP MOUNT PUSH−PUSH TYPE

SIZE	CAGE CODE	DRAWING NO 番号	RESTRICTED TO
A3	00779	C-6376653	

CUSTOMER DRAWING | SCALE 尺度 1:1 | SHEET 2 OF 2 | REV A